WAR DEPARTMENT TECHNICAL MANUAL

TM 11-235

This manual supersedes TM 11-235, 14 May 1943, including C 1, 15 December 1943, C 2, 18 October 1944; TB 11-235-1, 31 May 1944; TB 11-235-2, 22 July 1944; TB 11-235-3, 8 August 1944; TB 11-235-4, 11 August 1944; TB 11-235-5, 16 September 1944; TB 11-235-6, 14 November 1944; TB 11-235-7, November 1944; and TB 11-235-8, 25 January 1945.

RADIO SETS SCR-536-A,

-B, -C, -D, -E, AND -F

WAR DEPARTMENT • MAY 1945

United States Government Printing Office
Washington: 1945

WAR DEPARTMENT
Washington 25, D. C., 31 May 1945

TM 11–235, Radio Sets SCR–536–A, –B, –C, –D, –E, and –F, is published for the information and guidance of all concerned.

[AG 300.7 (28 Nov 44)]

BY ORDER OF THE SECRETARY OF WAR:

G. C. MARSHALL
Chief of Staff

OFFICIAL:

J. A. ULIO
Major General
The Adjutant General

DISTRIBUTION:

AAF (5); AGF (5); ASF (2); T of Opn (5); Dept (5); Def Comd (2); Base Comd (5); AAF Comd (2); Arm & Sv Bd (1); S Div ASF (1); Tech Sv (2); SvC (5); Area ASVC (2); WDGS Lib (5); PC&S (2); PE (2); Dep 11 (2); Gen Oversea SOS Dep (Sig Sec) (2); GH (2); M Conc C (2); Air Base Hosp (2); Gen Sv Sch (5); Sp Sv Sch (10); USMA (10); ROTC (5); Lab 11 (2); Sig AS (2); Rep Shop 11 (2); A (5); D (2); AF (2); Three (3) copies to each of the following: T/O & E 1–157; 1–617; 1–911; 1–987; 2–87T; 4–104; 4–227; 4–260–1; 6–156; 6–157; 6–186; 6–187; 7–16; 7–17; 7–18; 7–26; 7–27; 7–36; 7–37; 7–57; 7–58; 7–77; 7–86; 7–137; 7–138; 7–416; 7–417; 11–7; 11–7S; 11–15; 11–25; 11–95; 11–107; 11–127; 11–147S; 11–237; 11–287; 11–488S; 11–557; 11–557T; 44–327.

Refer to FM 21–6 for explanation of distribution formula.

SC
3585
A

TECHNICAL MANUAL

RADIO SETS SCR-536-A, -B, -C, -D, -E, AND -F

CHANGES No. 2

DEPARTMENT OF THE ARMY
WASHINGTON 25, D. C., *8 March 1954.*

TM 11-235, 31 May 1945, is changed as follows:

25.1. Antijamming Information
(Added)

Radio Set SCR-536-(*) has fixed-frequency design characteristics. When the receiver is jammed, follow the procedures listed below until the transmitted signal is heard again.

a. Slowly tilt the radio set so that the antenna becomes horizontal. Listen for the received signal while this is done. Operate the equipment in the position which gives the best signal read-through.

b. If this is not successful, stand between the radio set and the jamming source; this may offer sufficient shielding so that the interfering signal may be reduced effectively.

c. If the steps given in *a* and *b* above are not successful, change the antenna length and/or direction.

d. If the receiver is still jammed, operate the equipment from behind some object, such as a truck, tank, jeep, or other vehicle that is located between the receiver and the source of the jamming action.

e. If the jamming action is so effective that it is impossible to communicate, use some other means of getting the message through. Continue to operate; this keeps the enemy uncertain as to his jamming success.

54. Components
(As changed by C 1, 9 Jul 47)

Homing Modification Kit * * * Modification Kit MC-619:

Signal Corps stock No.	Quantity	Name and description
*	*	* * *
		Coupling Unit BC-1387.
		Case CS-144; for carrying Radio Set SCR-536-( ) components for Modification Kit MC-619, and Antenna AN-190-( ).
		Bottom cover plate (modified).
*	*	* * *

* * * * *

d. Accessories. (1) Case CS-144 provides carrying space for the radio set and for the kit components. The bags are * * * in this bag.

* * * * *

[AG 300.7 (5 Jun 47) (11 Feb 54)]

BY ORDER OF THE SECRETARY OF THE ARMY:

M. B. RIDGWAY,
General, United States Army,
Chief of Staff.

OFFICIAL:
WM. E. BERGIN,
Major General, United States Army,
The Adjutant General.

DISTRIBUTION:

Active Army:

Tech Svc (1); Tech Svc Bd (1); AFF Bd (ea. Svc Test Sec) (1); AFF (5); AA Comd (2); OS Maj Comd (5); Base Comd (5); MDW (2); Log Comd (5); A (5); CHQ (2); FT (2); Sch (5) except 11 (25); Gen Dep (2); Dep 11 (20) except Sig Sec, Gen Dep (10); Tng Div (2); POE (2), OS Sup Agencies (2); Lab 11 (5); Mil Dist (3); Field Maint Shops 11 (3); Two (2) copies to each of the following T/O & E's: 11-107; 11-127; 11-128; 11-500A GA-GP, KA, KB, KC, RA-RR; 11-587; 11-592; 11-597.

NG: Same as Active Army except one copy to each unit.

USAR: None.

For explanation of distribution formula, see SR 310-90-1.

*These changes supersede C 1, 9 July 1947.

U. S. GOVERNMENT PRINTING OFFICE: 1954

CONTENTS

		Paragraph	Page
PART ONE.	**INTRODUCTION.**		
Section I.	Description of Radio Sets SCR-536-A, -B, -C, -D, -E, and -F.		
	General	1	1
	Technical characteristics of Radio Set SCR-536-(*)	2	2
	Frequency Spectrum Chart	3	3
	Table of components	4	3
	Shipping weights and dimensions of packed sets	5	3
	Housing	6	5
	Power supply	7	7
	Chassis	8	7
	Controls	9	10
	Moistureseals	10	10
	Differences in models	11	11
II.	Installation of Radio Set SCR-536-(*).		
	Unpacking and checking	12	11
	Installation	13	11
	Repacking	14	14
PART TWO.	**OPERATING INSTRUCTIONS.**		
Section III.	Controls and their use.		
	General	15	15
	Turning set on and off	16	15
	Receiving and transmitting	17	15
	Controlling volume	18	15
	Tuning	19	15
IV.	Operation.		
	Starting procedure	20	15
	Siting	21	15
	Camouflaging	22	16
	Receiving	23	16
	Transmitting	24	18
	Net operation	25	18
	Stopping procedure	26	19
V.	Equipment performance check list.		
	Purpose and use of check list	27	19
	Equipment performance check list.	28	20
PART THREE.	**MAINTENANCE INSTRUCTIONS.**		
Section VI.	Preventive maintenance techniques.		
	Meaning of preventive maintenance	29	21
	Description of preventive maintenance techniques	30	21
VII.	Itemized preventive maintenance.		
	Introduction	31	22
	Preventive maintenance tools and materials	32	23
	Item 1, exterior of Radio Set SCR-536-(*)	33	23
	Item 2, antenna	34	24
	Item 3, inside bottom cover	35	24
	Item 4, chassis and interior of Radio Set SCR-536-(*)	36	24
	Preventive maintenance check list	37	25
	Factors determining preventive maintenance periods	38	25
VIII.	Lubrication.		
	Lubrication instructions	39	26
	Recommended lubricants for camouflaging and waterproofing	40	26
IX.	Moistureproofing and fungiproofing.		
	Problems encountered	41	26
	Treatment	42	26
	Step-by-step instructions	43	27
	Moistureproofing and fungiproofing after repairs	44	30
X.	Waterproofing.		
	General	45	30
	Procedure	46	30
	Materials required	47	31
PART FOUR.	**AUXILIARY EQUIPMENT.**		
Section XI.	Operating accessories.		
	Battery BA-30 filament supply	48	32
	Inclement weather protection	49	33
	Expedient antenna	50	34
	Equipment for use with external jacks	51	34
	Maintenance Equipment ME-36	52	35
XII.	Homing Modification Kit MC-619.		
	General	53	35
	Components	54	36
	Installation	55	36
	Operation	56	38
	Theory of equipment	57	42
	Mounting bottom plate	58	43
	Pretuning	59	43
	Moistureproofing and fungiproofing	60	44
	Moistureproofing and fungiproofing after repairs	61	46
XIII.	Frequency conversion kits.		
	Frequency Conversion Kit MC-534	62	46
	Frequency Conversion Kit MC-518	63	48
PART FIVE.	**REPAIR INSTRUCTIONS.**		
Section XIV.	Theory of equipment.		
	Block diagram of Radio Set SCR-536-(*)	64	49
	Circuit description	65	52

	Paragraph	Page
Receiver r-f amplifier	66	52
Converter	67	52
I-f amplifier	68	53
Detector, automatic volume control, and first audio amplifier	69	53
Receiver power output amplifier	70	53
Transmitter oscillator	71	56
Transmitter r-f amplifier	72	56
Microphone amplifier	73	56
Modulator	74	56
Press-to-talk switch	75	56
XV. Trouble shooting.		
General trouble-shooting information	76	57
Test Equipment IE–15–A	77	61
Test Stand FT–252–( )	78	61
Test Case CS–81–( )	79	62
Test Set I–56–( )	80	62
Test Equipment IE–17–( )	81	63
Test Unit I–135–( )	82	64
Trouble-shooting procedures	83	68
Sectionalizing trouble in Radio Set SCR–536–(*)	84	68
Sectionalizing trouble in receiver circuit	85	69
Sectionalizing trouble in transmitter circuit	86	69
Localizing trouble in receiver and transmitter circuits	87	69
XVI. Repairs.		
Replacement of press-to-talk switch	88	71
Chassis removal	89	71
Replacement of microphone	90	71
Replacement of earphone	91	72
Replacement of on-off switch	92	72
Replacement of antenna	93	72
Replacement of resistor-capacitor cups	94	72
Replacement of tubes	95	73
Changing coils and crystals	96	73
Removal of eyelets	97	73
Replacement of i-f transformer	98	73
Unsatisfactory equipment report	99	75
XVII. Alignment and adjustment.		
General	100	75
I-f alignment using signal generator	101	75
I-f alignment using Test Unit I–135–( )	102	76
Minimum test requirements for Radio Receiver and Transmitter BC–611–(*)	103	76
XVIII. Presetting.		
General	104	76
Setting up Test Equipment IE–15–A	105	77
Presetting receiver with Test Equipment IE–15–A	106	77
Presetting transmitter with Test Equipment IE–15–A	107	77
Checking for image frequency	108	80
Using Radio Set SCR–536–(*) as signal generator	109	81
Crystal activity test	110	82
Presetting receiver with Test Equipment IE–17–( )	111	83
Presetting transmitter with Test Equipment IE–17–( )	112	85
Testing Batteries BA–37 and BA–38 with Test Equipment IE–17–( )	113	86
Receiver sensitivity	114	86
Receiver performance characteristics	115	86
Transmitter performance characteristics	116	87
XIX. Emergency alignment and presetting procedure.		
General	117	87
Major test equipment components	118	87
Housing modification	119	87
Foodback capacitor	120	89
Receiver alignment	121	90
Transmitter alignment	122	91
Battery checking	123	92
Alignment of set used as signal source	124	92
APPENDIX I. REFERENCES.		
Army Regulations	1	93
Supply publications	2	93
Technical Manuals on auxiliary equipment and test equipment	3	93
Painting, preserving, and lubrication	4	93
Camouflage	5	93
Shipping instructions	6	93
Decontamination	7	93
Demolition	8	93
Other publications	9	93
Forms	10	94
Abbreviations	11	94
Glossary	12	94
II. MAINTENANCE PARTS.		
Maintenance parts for Radio Set SCR–536–(*)	1	98
Maintenance parts for Homing Modification Kit MC–619	2	98

DESTRUCTION NOTICE

WHY —To prevent the enemy from using or salvaging this equipment for his benefit.

WHEN—When ordered by your commander.

HOW —1. Smash—Use sledges, axes, handaxes, pickaxes, hammers, crowbars, heavy tools.

2. Cut—Use axes, handaxes, machetes.

3. Burn—Use gasoline, kerosene, oil, flame throwers, incendiary grenades.

4. Explosives—Use firearms, grenades, TNT.

5. Disposal—Bury in slit trenches, fox holes, other holes. Throw in streams. Scatter.

USE ANYTHING IMMEDIATELY AVAILABLE FOR DESTRUCTION OF THIS EQUIPMENT.

WHAT—1. Smash—Case, chassis, crystals, coils, capacitors, tubes, batteries, switches, microphone, and earphone.

2. Cut—Wiring, terminal strips, and carrying strap.

3. Burn—Technical Manuals and supplementary instructions, smashed chassis and parts.

4. Bend—Antenna sections.

5. Bury or scatter—All remaining debris.

DESTROY EVERYTHING

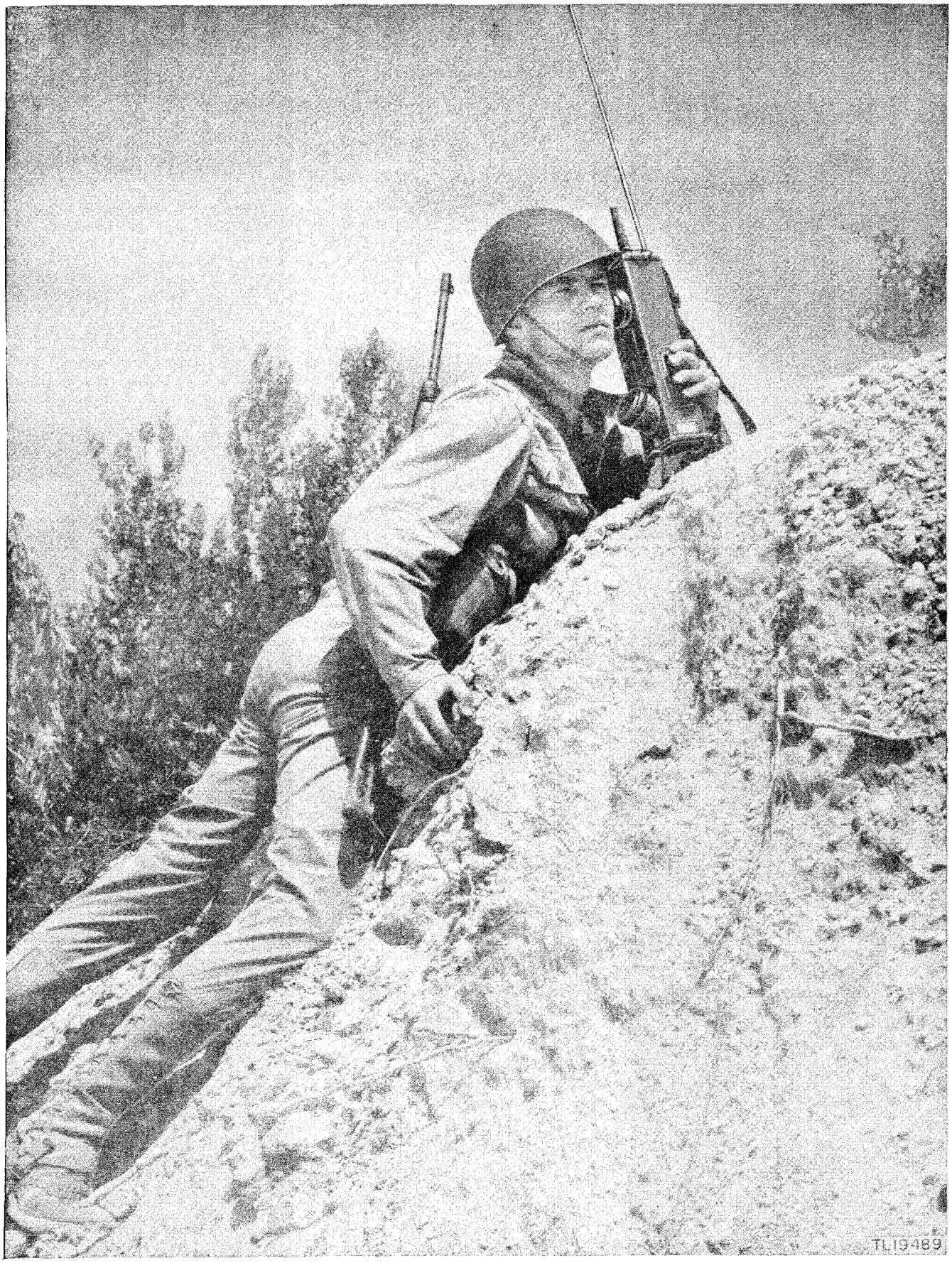
TL19489

This manual supersedes TM 11-235, 14 May 1943, including C1, 15 December 1943, C2, 18 October 1944; TB 11-235-1, 31 May 1944; TB 11-235-2, 22 July 1944; TB 11-235-3, 8 August 1944; TB 11-235-4, 11 August 1944; TB 11-235-5, 16 September 1944; TB 11-235-6, 14 November 1944; TB 11-235-7, November 1944; and TB 11-235-8, 25 January 1945.

PART ONE

INTRODUCTION

Section I. DESCRIPTION OF RADIO SETS SCR-536-A, -B, -C, -D, -E, AND -F

1. General

a. Radio Set SCR-536-A, -B, -C, -D, -E, or -F consists of a five-tube, low-power, dry-battery-operated radio receiver and transmitter, and certain accessories. It is designed for amplitude-modulated, two-way communication over short distances. The outstanding feature of its design and construction is its extreme portability. It is intended primarily as a handietalkie for foot combat troops.

b. Official nomenclature followed by (*) is used to indicate all models of the equipment included in this Technical Manual. Thus Radio Set SCR-536-(*) refers to Radio Sets SCR-536-A, -B, -C, -D, -E, and -F; and Radio Receiver and Transmitter BC-611-(*) refers to Radio Receiver and Transmitter BC-611-A, -B, -C, -D, -E, and -F. Official nomenclature followed by empty parentheses is used to indicate reference to all models of an item of equipment.

c. All operating components are self-contained in one case. Figure 1 is a simple block diagram showing the relationship between the various components of the radio set. The radio set is turned on by extending the antenna. When thus connected to its internal dry-battery power supply, the radio set functions as a receiver. Pressing the press-to-talk switch converts the receiver circuit to a transmitter circuit. The earphone provides sidetone so that the operator listens to his own voice when transmitting.

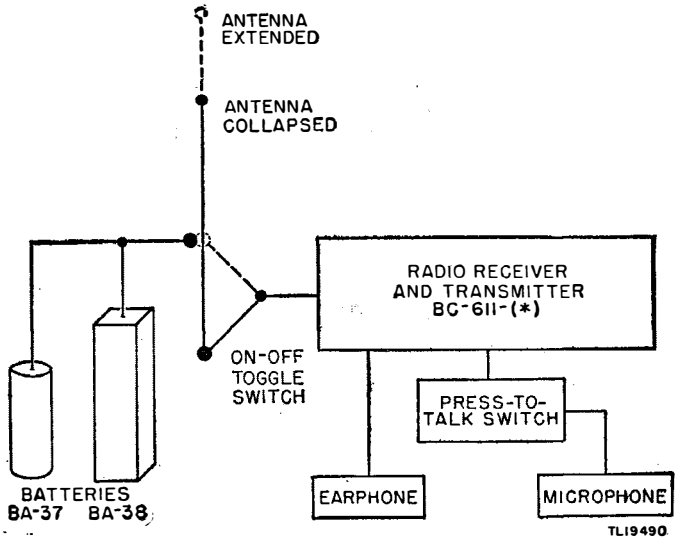

Figure 1. Radio Set SCR-536-(*), simplified block diagram.

Figure 2. Use of sling, set in operation.

d. The set may be held in either hand when operating, although it is designed and balanced for left-

hand operation. The microphone and earphone are attached to the case in such a manner that the set resembles a telephone handset. In addition, later models of Radio Set SCR–536–F are equipped with jacks to permit coupling an external microphone and headset. An adjustable carrying strap is attached to the case of Radio Set SCR–536–(*) for slinging and to provide additional support when used in the operating position. (See figs. 2 and 3.) The total weight of the set, including batteries as hand-carried for normal operation is 5.5 pounds.

2. Technical Characteristics of Radio Set SCR–536–(*)

Radio Set SCR–536–(*) is crystal-controlled on both reception and transmission, and will operate over the frequency range of 3.5 to 6.0 mc (megacycles). However, each unit is adjusted to operate at only one frequency in this band by proper choice of plug-in crystals and coils (fig. 4) followed by pretuning adjustments. The coil and crystal changes and the finer adjustments necessary to accurate pretuning cannot be made by the operator, but are preset by authorized maintenance and repair personnel.

Figure 3. Use of sling, set out of operation.

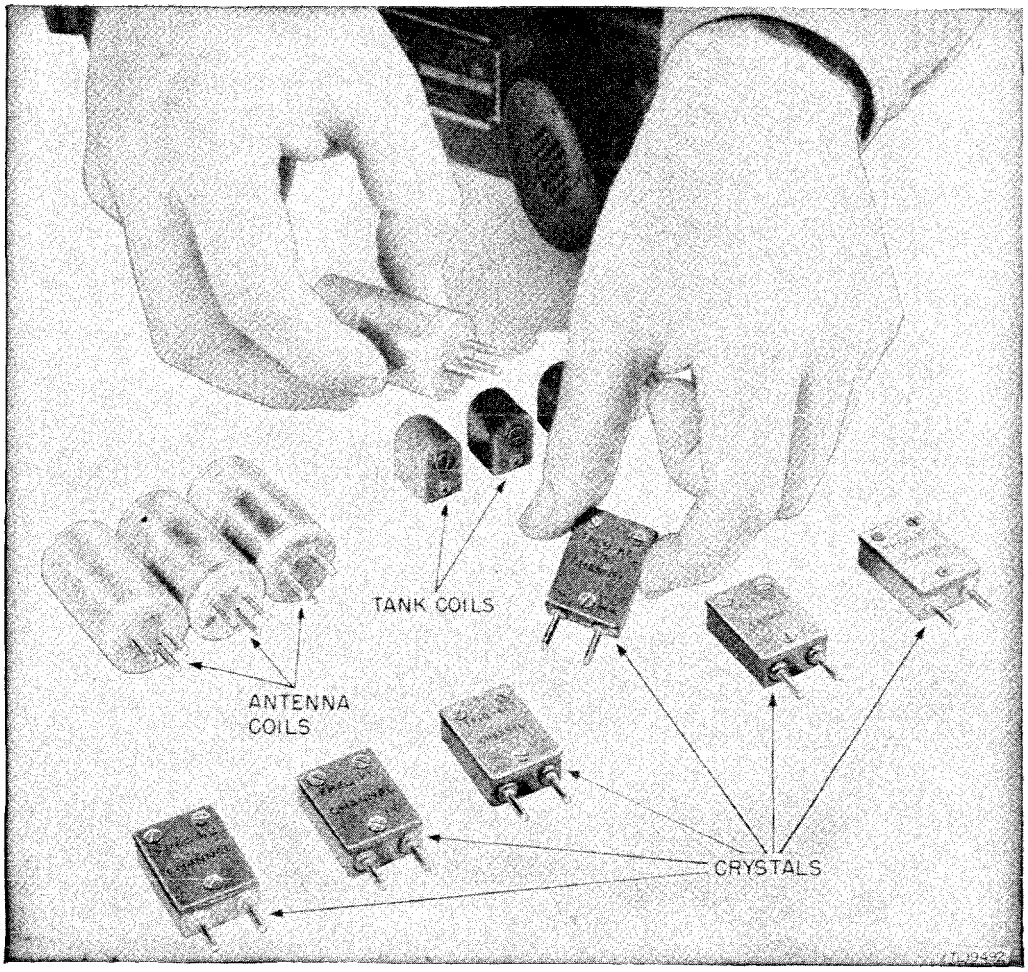

Figure 4. Plug-in coils and crystals.

a. Radio Receiver and Transmitter BC–611–(*).

Frequency range ..... 3.5 mc to 6.0 mc (any one of 50 channels).
Transmitter type ..... crystal-oscillator power-amplifier
Receiver type ..... crystal-controlled superheterodyne
Type of signal transmitted ..... voice
Types of signals received ..... voice and tone
Receiver intermediate frequency ..... 455 kc
Distance range:
  Over land ..... 1 mi*
  Over salt water ..... 3 mi*
Type of modulation ..... amplitude
Number of tubes ..... 5 (only 4 used for transmitting)
Antenna ..... 40-in. telescopic rod
Weight (with coils, crystals, and tubes, but without batteries) ..... 3.85 lb.

* These are approximate values. Hills, foliage, terrain features, atmospheric conditions, ground moisture, battery age, and internal dirt and moisture due to ineffective preventive maintenance combine to reduce these values.

b. Power Supply.

Battery BA–37 (filament supply) ..... 1.5 v
  Drain while receiving ..... 250 ma
  Drain while transmitting ..... 300 ma
Battery BA–38 (plate supply) ..... 103.5 v
  Drain while receiving ..... 11 ma
  Drain while transmitting ..... 35 ma
Battery life ..... 19 hr single day
Weight:
  Battery BA–37 ..... 0.5 lb
  Battery BA–38 ..... 1.1 lb

† Single dry battery life is considerably reduced when old batteries are used and when the radio set is used primarily for transmitting and only incidentally for receiving. When batteries are changed, both batteries should be renewed simultaneously to minimize frequent battery trouble.

3. Frequency Spectrum Chart

The Frequency Spectrum Chart (fig. 5) illustrates the operating band of Radio Set SCR–536–(*) in relation to other amplitude-modulated sets with which it may be used for communication.

4. Table of Components

Note. This list is for general information only. See appropriate publications for information pertaining to requisition of spare parts.

5. Shipping Weights and Dimensions of Packed Sets

Radio Set SCR–536–(*) comes packed in a cardboard carton which in turn is sealed in a vaporproof

Note. The packing of batteries, additional coils and crystals, running spare parts, and accessories varies with the particular shipment of the set.

Component	Required No.	Height (in.)	Depth (in.)	Width (in.)	Weight (lb)
Package containing— Radio Receiver and Transmitter BC–611–(*), with coils, crystals, and tubes (without batteries)	1	15¾	5⅜	3⅝	3.85
TM 11–235	2				
Battery BA–37 (1.5 volts).	4	5 15/16		1 5/16 (diam)	0.50
Battery BA–38 (103.5 volts).	4	11¾	1 11/32	1 11/32	1.10
Battery Adapter FT–501.	2				
Microphone Cover M–367.	1				
Tube Set GK–174 (one complete set of spare tubes).	1				
Box BX–49 (one set of coils and crystals for each of 12 operating frequencies for Radio Set SCR–536–D only).	1				2.6
Set of crystals for Radio Set SCR–536–A only (spare).					

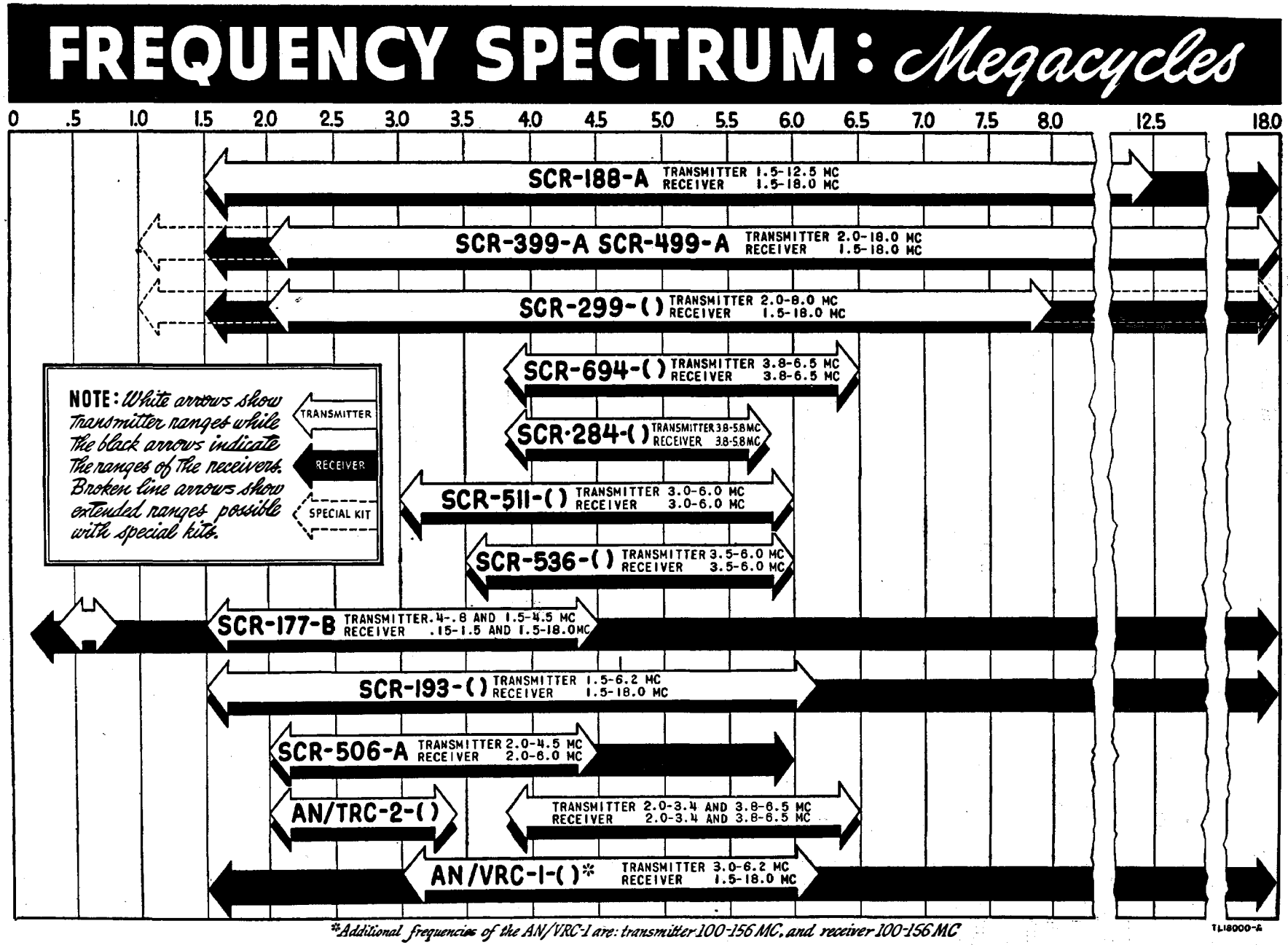

Figure 5. Frequency Spectrum Chart.

bag and then packed in a waterproof carton. The set, thus protected from moisture, is then packed in a wooden case bound with two metal straps. The over-all dimensions of the complete package are: 21¼ inches long, 10½ inches deep, and 7⅜ inches high. The total weight of the set packed for export is 17 pounds. See paragraph 12 and figure 14 for unpacking information.

6. Housing

The housing which incloses Radio Receiver and Transmitter BC–611–(*) is a metal casting. Its interior is divided into three separate compartments: one for the radio chassis, one for the square B battery, and one for the cylindrical A battery. (See fig. 6.)

a. Two projections from the housing contain the earphone and microphone units. These projections are so spaced that when the radio set is held with the earphone against the ear of the operator, the microphone is in the proper position for operation.

b. The press-to-talk switch, mounted on the side of the case, operates the change-over switch on the radio chassis. (See fig. 7.) This converts the set from a receiver to a transmitter. This switch is so located that it may be operated easily with the fingertips when the set is held in the left hand.

c. The bottom cover hinges to the housing and is provided with a slot into which a latching bolt fits. It is through this end of the housing that the chassis and the batteries are inserted or removed. Spring contacts on the terminal board inside the bottom cover provide the connection between the batteries and the radio chassis. (See fig. 6.)

d. A small card holder below the press-to-talk switch contains a card on which are written the operating frequency, channel, and the date and time of the last battery replacement. This card is protected from wear by a transparent cover. To remove the card, the bottom cover of the housing must first be opened.

e. Later models of Radio Set SCR–536–F have a new type bottom cover equipped with projecting jacks (fig. 8) so that an external microphone and headset may be used. This permits operation of the radio set without having to support it near the mouth and ear. In this position the set is easily concealed

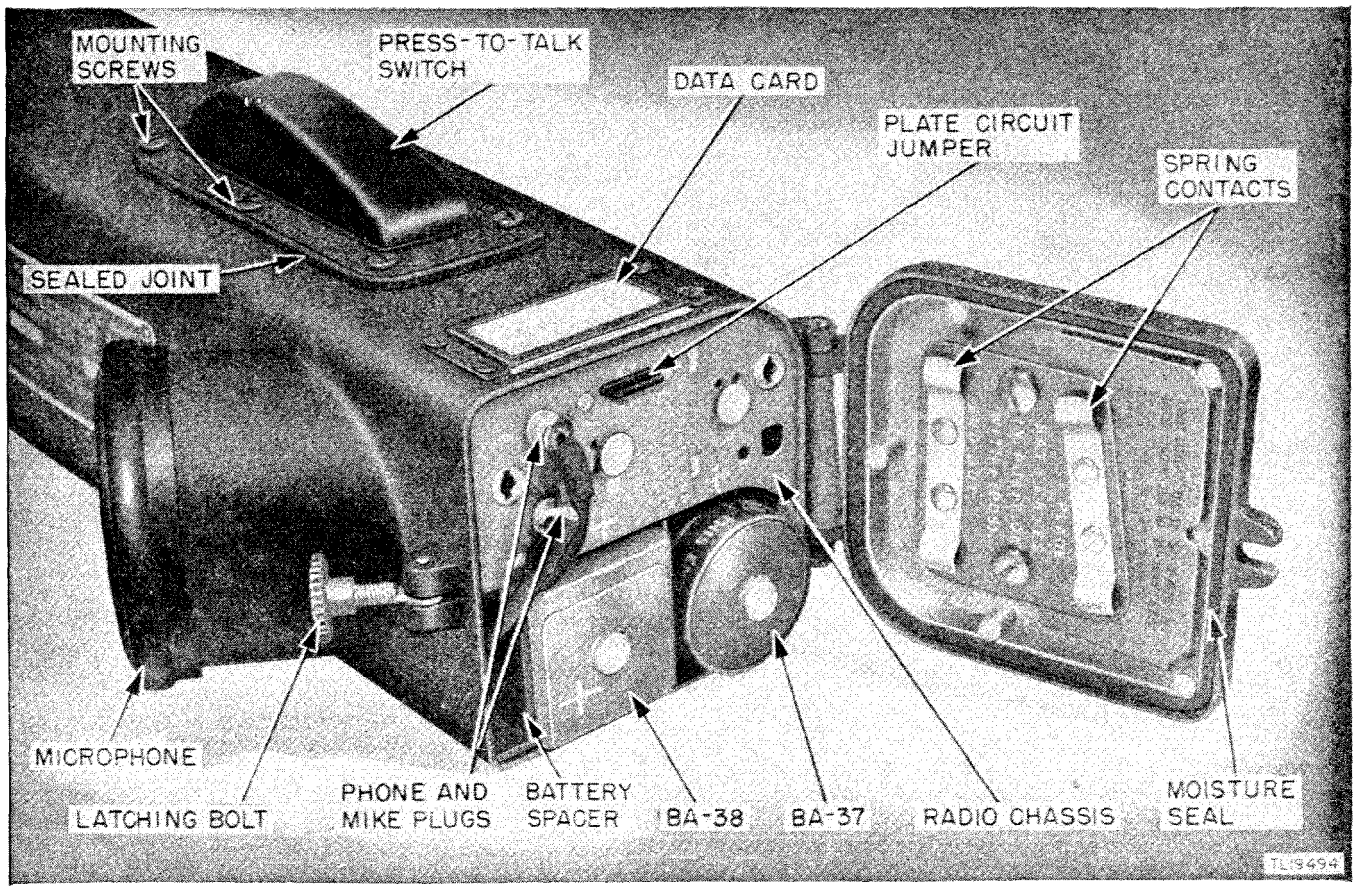

Figure 6. Radio Set SCR–536–(*), bottom cover open.

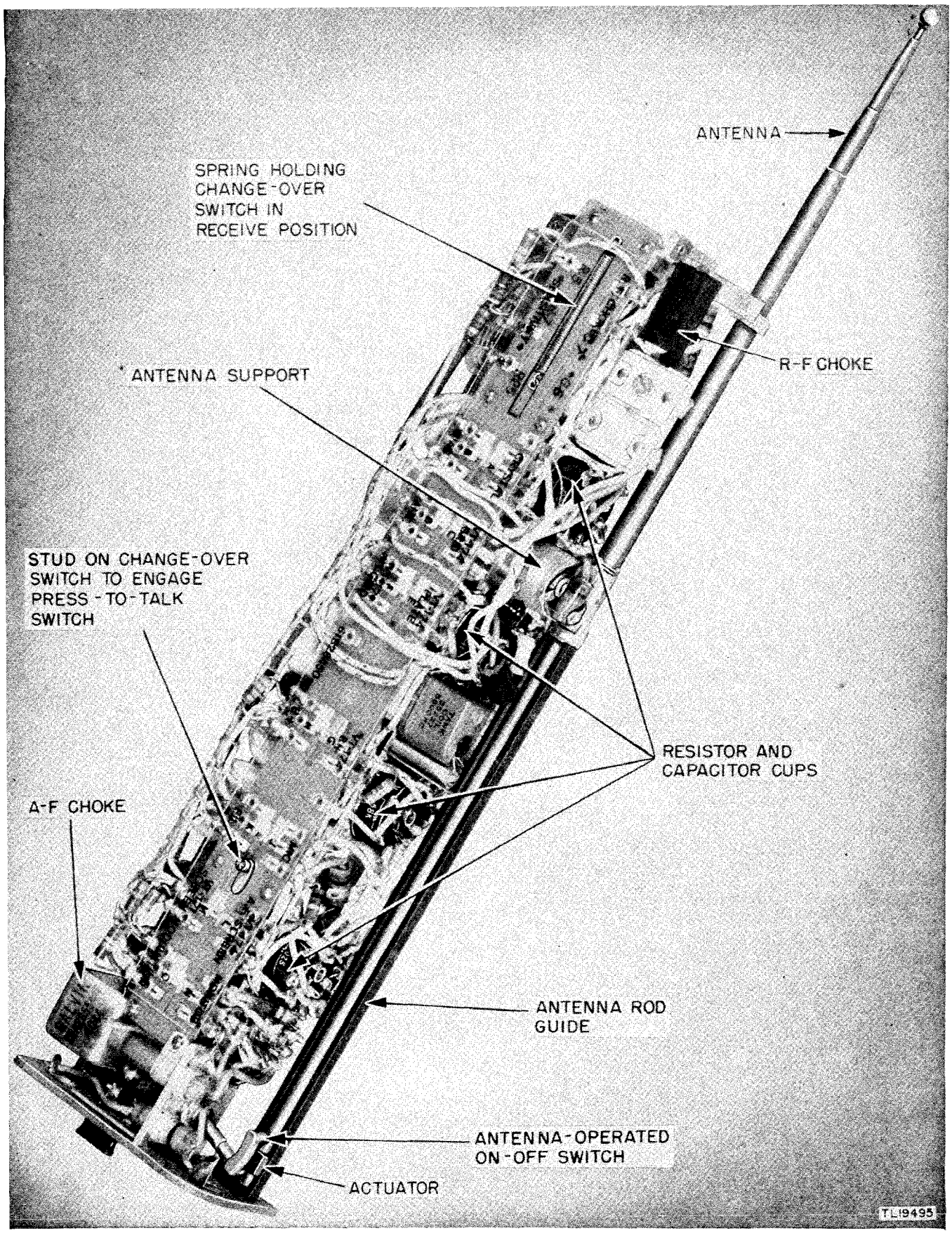

Figure 7. Radio Receiver and Transmitter BC-611-(*) (except BC-611-F), front view of chassis.

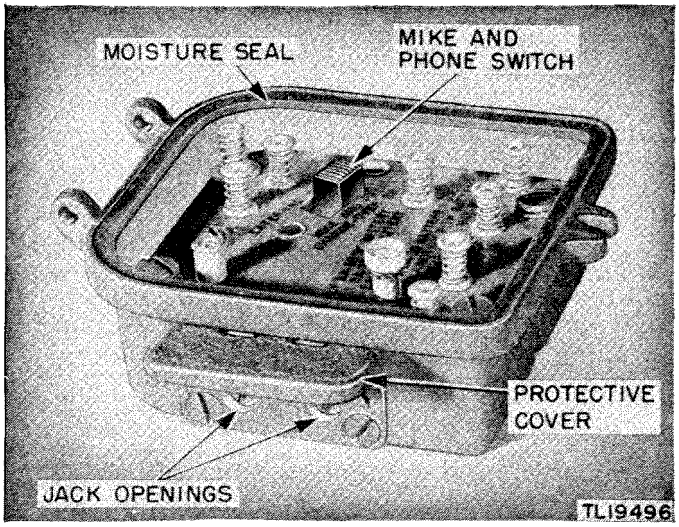

Figure 8. Radio Set SCR-536-F, new type bottom cover.

and external noise, causing poor reception and transmission, is reduced. (See fig. 9.)

f. The top cover of the housing contains an opening for the antenna rod. On some models a polystyrene antenna support has been incorporated at the antenna end of the chassis to act as a support for the antenna rod and to prevent breakage of the antenna guide during servicing or in case of rough handling. (See fig. 10.) A mounting screw holds the chassis and top cover securely in place. Spring battery contacts are fastened to the top cover to make connection to the ends of the two batteries. An antenna cap, attached to the outside of the cover by a chain, protects the antenna insulator and collapsed antenna when the radio set is not in use. A mounting stud holds the protective cap firmly in place when the antenna is extended, preventing loss and the possibility of fouling around the antenna base and short-circuiting antenna current to the case. (See fig. 11.)

Figure 9. Radio Set SCR-536-F, in operating position using headset and microphone.

Note. Early issues of Radio Set SCR-536-A were furnished with a crystal microphone and crystal earphone. Later issues of Radio Set SCR-536-(*) are furnished with an inductor microphone and an inductor earphone. These components are electrically and mechanically interchangeable with the crystal units they replace.

7. Power Supply

The batteries are shown in figure 12. Battery BA-37 is the A, or filament, battery (1.5 volts). It is cylindrical in shape and shorter than the square B, or plate voltage, Battery BA-38 (103.5 volts). The compartments in the housing for the batteries are so designed that it is impossible to confuse the two batteries and inadvertently insert the wrong batteries in the wrong compartments. (See fig. 6.)

8. Chassis

a. Resistor-capacitor Cups. On the chassis there are four resistor-capacitor containers which are called cups. (See fig. 7.) The cups fit around the tube sockets and are attached to them with cement. The purpose of the cups is to provide tie terminals and a place for some of the resistors and capacitors used in the set. Each cup consists of a thin bakelite shell of circular shape, with an inner and outer wall. The resistors and capacitors are placed in the space between these walls. Impregnating compound seals these parts into the cup. The top piece joining the two walls is drilled so that the leads from the capacitors and resistors can be brought out. Some of the parts are soldered to terminals riveted to the top piece of the cup. Each cup has a part number marked on it, as well as a schematic drawing of the parts in it. (Radio Set SCR-536-F does not use these cups. Resistors and capacitors are mounted on a conventional terminal board in this model (fig. 13)).

b. Antenna Coil. The ANTENNA coil is a

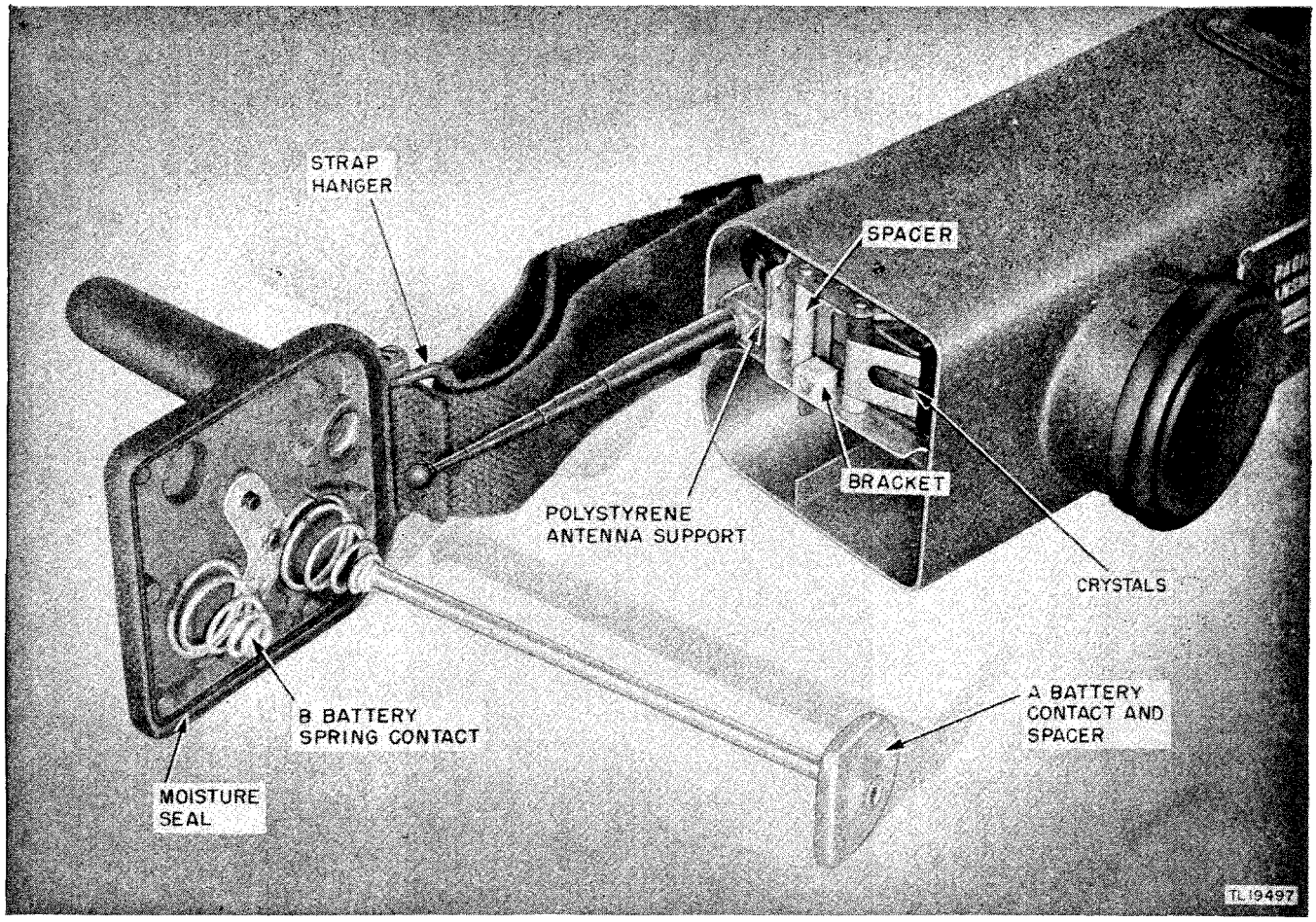

Figure 10. Radio Set SCR-536-(*), top cover open.

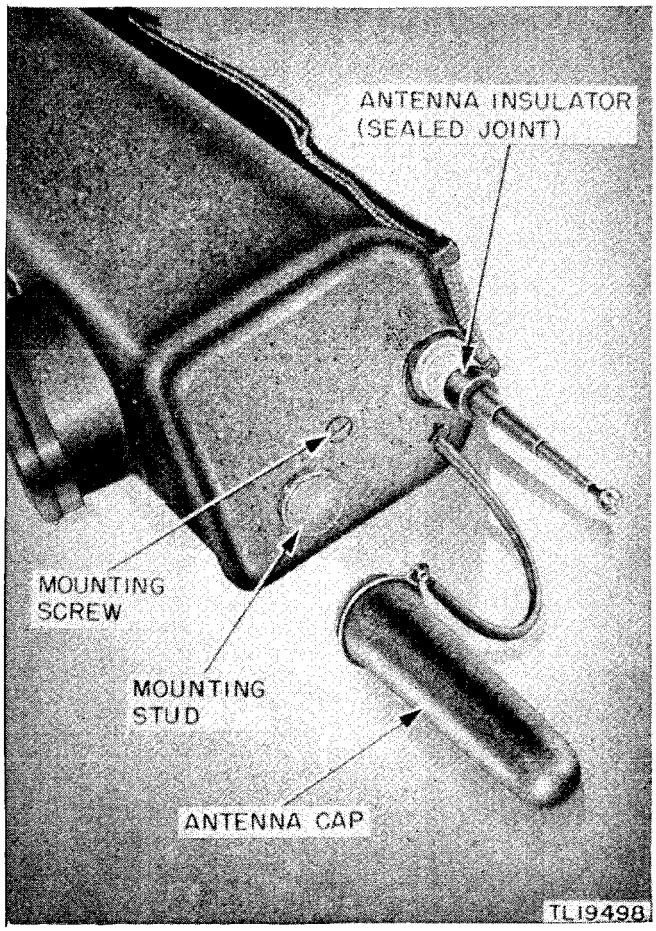

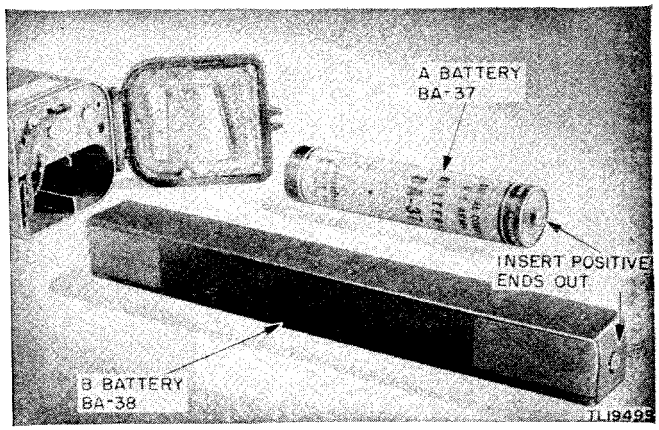

Figure 12. Batteries BA-37 and BA-38.

Figure 11. Radio Set SCR-536-(*), top view.

Tube location corrected 16 July 2007

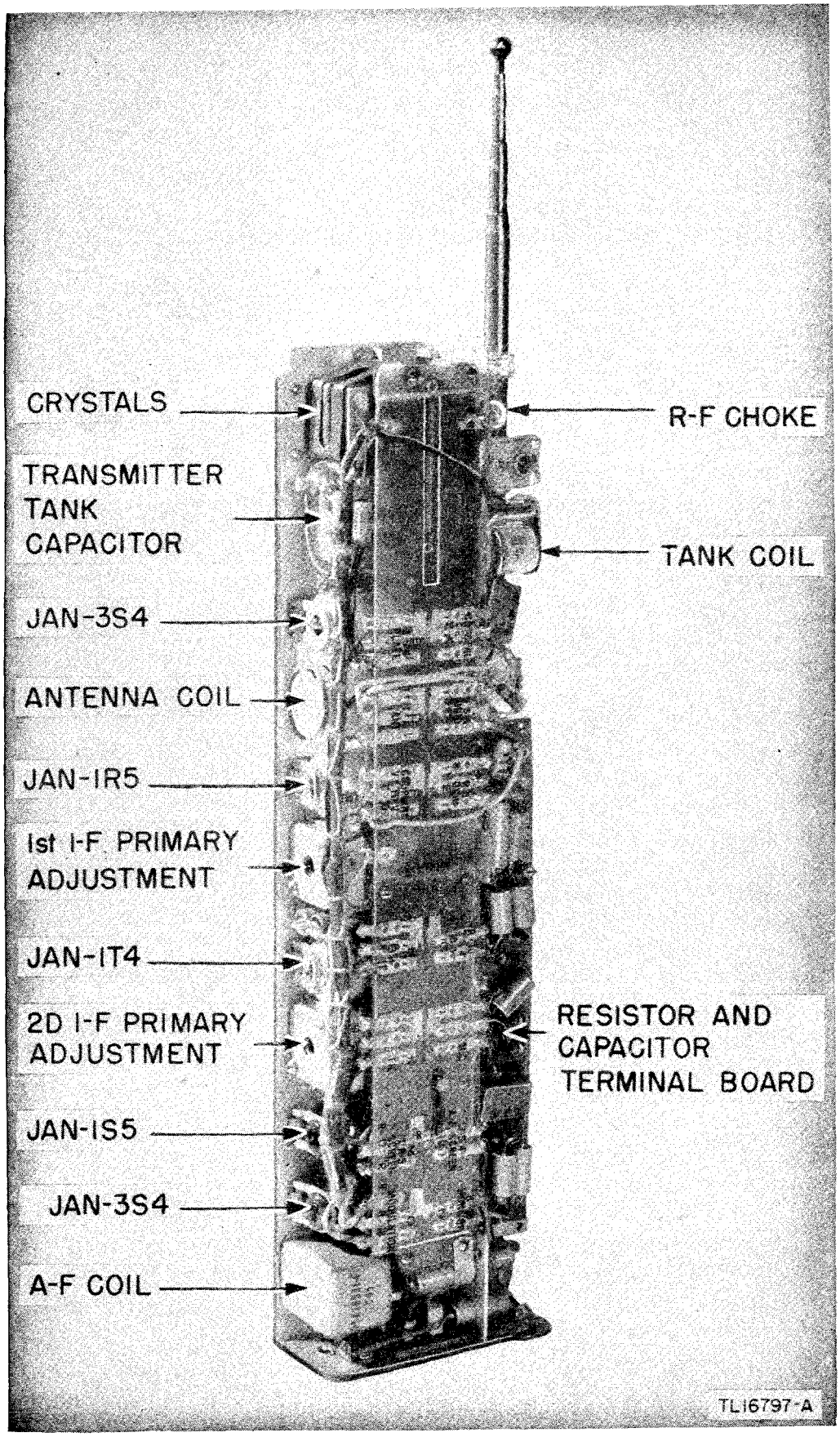

Figure 13. Radio Receiver and Transmitter BC–611–F, front view of chassis.

plug-in coil of the solenoid type and is wound on a polystyrene form. The coil has three pins on its base, two of which are electrically connected to the coil. Each coil is marked with the name and frequency of the coil. The antenna coil socket is also of polystyrene, and is fastened to the chassis by a long rivet through its center. This rivet also fastens the antenna clamp and the antenna polystyrene support to the chassis. Electrical contact is made to the antenna at this point by spring contacts.

c. Plate Circuit r-f Coil. The tuned r-f (radio-frequency) amplifier plate coil (marked TANK COIL) is wound on a small mica filled bakelite form. The coil is permeability tuned and has a powdered iron core in the form of a hexagon nut. The winding and core are not visible, as they are surrounded by a bakelite shell which completely incloses them. This shell is riveted to the coil form. A threaded bakelite screw fits into the threaded iron core, and the motion of the screw moves the core relative to the winding, thereby determining the inductance value. The name and frequency range is marked on each coil. The coil form has a female type base. The socket contains two pin connections which fit into holes in the coil form and make electrical contact to the coil. The pins are gripped by spring clip connections in the base of the coil form. A hole is provided in the socket for the inductance-adjusting screw which extends through the form. A spring clip in the socket grips the tuning screw and provides a more rigid support for the coil. A spring clip on top of the form prevents the coil from working loose from the socket.

d. First i-f Transformer. The i-f (intermediate-frequency) transformer windings are on a powdered iron core and are surrounded by a powdered iron sleeve to further increase their inductance. This type of construction gives a high inductance with a small winding which results in a small size transformer. The primary and secondary of the first i-f transformer are tuned by small adjustable mica trimmers contained in the shield can. The adjustment of the trimmers is reached through two holes in the top of the can. A 1-megohm resistor is shunted across the secondary winding and serves to broaden the response of the transformer. This resistor is contained in the shield can. The transformer is held in the can by a metal bottom plate which is secured by rolling the side walls of the shield over the edges of the plate. Two U-shaped clamps riveted to the back side of the chassis hold the transformer in place.

e. Second i-f Transformer. The second i-f transformer construction is similar to that of the first i-f transformer. Only one trimmer is used, however, and it is connected across the secondary winding. This trimmer is accessible through a hole in the top of the shield can. The transformer fastens to the chassis in the same manner as the first i-f transformer. A 220,000-ohm resistor and two 70-microfarad mica capacitors are also mounted in the shield can. They make up an i-f filter for the detector circuit.

Note. The i-f transformers in Radio Set SCR-536-F are both double-tuned by adjustable powdered-iron slugs. These slugs are easily accessible through holes in the top and bottom of each can. Fixed mica capacitors, one for each winding, are located at each end of the transformer completing the tuned circuit. No trimmers or shunt resistors are used.

f. Crystals. There are two crystals used in Radio Receiver and Transmitter BC-611-(*). The receiver crystal is 455 kc (kilocycles) higher in frequency than the transmitter crystal. The crystals are contained in plug-in type holders with two pin connections. They are completely sealed against moisture. The crystals are marked REC. and TRAN. to indicate their use in the receiver and transmitter circuits. Each crystal holder has an arrow indicating the direction in which it should be placed in the socket. The sockets carry a similar marking. The metal cover plate of the crystal holder, marked with the frequency, does not make contact with the crystal blank in the holder, but it does have a capacitive effect on the crystal. If it comes in contact with the chassis or metal clamp which holds the crystal in the socket, the operation of the crystal will be affected. A piece of insulating material covers the chassis where the transmitter crystal might touch when the set is jarred. When crystal activity is low, it should be replaced with another. Do not attempt to take the holder apart.

9. Controls

The only operating controls are the antenna on-off swich and the press-to-talk switch. (See par. 15.)

10. Moistureseals

a. Radio Set SCR-536-(*) is not waterproof. The top and bottom covers are provided with heavy moisture seal rings to provide effective moisture exclusion. A ring gasket seals the machine screwhead holding the chassis to the top cover. The joint between the antenna insulator and the case is sealed to prevent entrance of moisture. The jacks for the external microphone and headset for Radio Set

SCR–536–F are encased in a fungicide wax and molded-bakelite housing which is moisturesealed by a rubber gasket. The jack openings are covered by a hinged cover that provides dust and mud protection. (See fig. 8.) The flexible covering of the press-to-talk switch is cemented and held by a ribbed steel escutcheon plate clamped in place by six machine screws.

b. Additional waterproofing may be necessary to meet excessively wet operating conditions. Such supplementary waterproofing procedures are treated separately and in detail in section X.

11. Differences in Models

a. The differences in models are described in this manual whenever the components or circuits affected are described. None of the differences in the various models affect the basic operation of this equipment.

b. Later models of Radio Set SCR–536–F are equipped with a new type bottom cover which provides jacks for use of an external headset and microphone when desirable. The contact terminals on the new type bottom cover are also of a different design. (See fig. 8.) The MIKE and PHONE CHANGE-OVER SWITCH located inside the bottom cover and marked EXTERNAL-INTERNAL cuts the jacks in or out of the circuit. When the switch is in the EXTERNAL position, the microphone and earphone units mounted on the side of the set are cut out, permitting the use of the external units. Early models of Radio Set SCR–536–F do not have the new bottom cover, but are made so that the new cover may be fitted when available.

c. The following Modification Work Orders have been published pertaining to Radio Set SCR–536–(*).

(1) MWO SIG 11–235–1, 8 August 1944, authorizes the replacement of die-cast press-to-talk switch parts with steel-stamped parts to minimize breakage in service.

(2) MWO SIG 11–235–2, 25 August 1944, authorizes the addition of a polystyrene antenna support insulator at the top of the chassis (fig. 10) to provide firmer support for the telescopic rod antenna.

(3) MWO SIG 11–235–3, 18 October 1944, authorizes the replacement of molded bakelite microphone and earphone caps (not illustrated) by aluminum caps.

(4) MWO SIG 11–235–4, January 1945, authorizes the replacement of the top chassis mounting bracket (fig. 10) with a stronger bracket held in place by two machine screws.

(5) MWO SIG 11–235–5, 25 January 1945, authorizes the necessary drilling of the bottom cover assembly to mount an external headset jack (fig. 39) for use of Headset HS–30–( ) in connection with Homing Modification Kit MC–619.

Section II. INSTALLATION OF RADIO SET SCR–536–(*)

12. Unpacking and Checking

When unpacking Radio Set SCR–536–(*), follow the instructions in figure 14. Take care to keep the packing materials in good condition so that they may be used to repack the set when necessary. Read the repacking instructions (par. 14) before unpacking the set to insure that nothing is done to prevent convenient repacking. Report any misisng or damaged parts immediately.

Note. The silica-gel filled bags are included in the packing to absorb any moisture and prevent possible damage to the set during storage. Discard them after repacking. Do not use for repacking.

13. Installation

Since Radio Set SCR–536–(*) is designed for hand-carrying, no particular difficulties are attached to its installation.

a. General. Unlatch the bottom housing to permit inspection of the terminal plate on the bottom of Radio Receiver and Transmitter BC–611–(*). (See fig. 6.) The lead from the microphone should be plugged into the socket labeled MIKE, and the lead from the earphone should be plugged into the socket labeled PHONE. The black-handled jumper plug must be inserted between the sockets labeled PLATE METER. The contact studs should be clean and bright. If not, clean them with a pocket knife or other convenient scraper.

b. Tubes (fig. 15). Tubes are mounted in their sockets before shipment. For information on replacement of tubes, see paragraph 93.

c. Batteries. (1) Radio Set SCR–536–(*) uses one Battery BA–37 and one Battery BA–38. (See fig. 12.) Instructions for insertion are included on the inside of the bottom cover plate. Both positive (+) and negative (—) terminals on each end of the batteries must be scraped clean and bright for effective electrical contact with the spring connectors on the end plates of the housing. Since batteries are

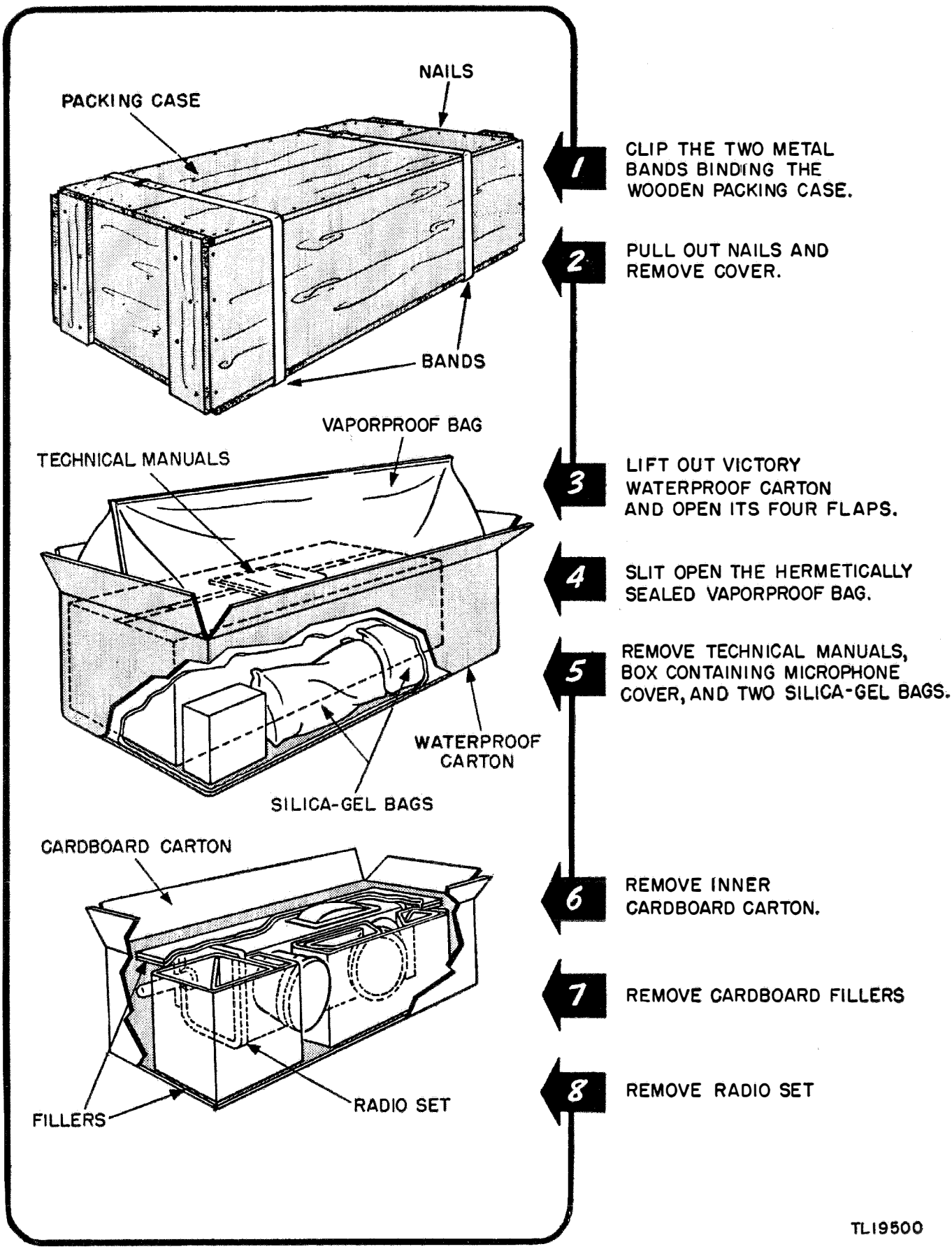

Figure 14. Unpacking.

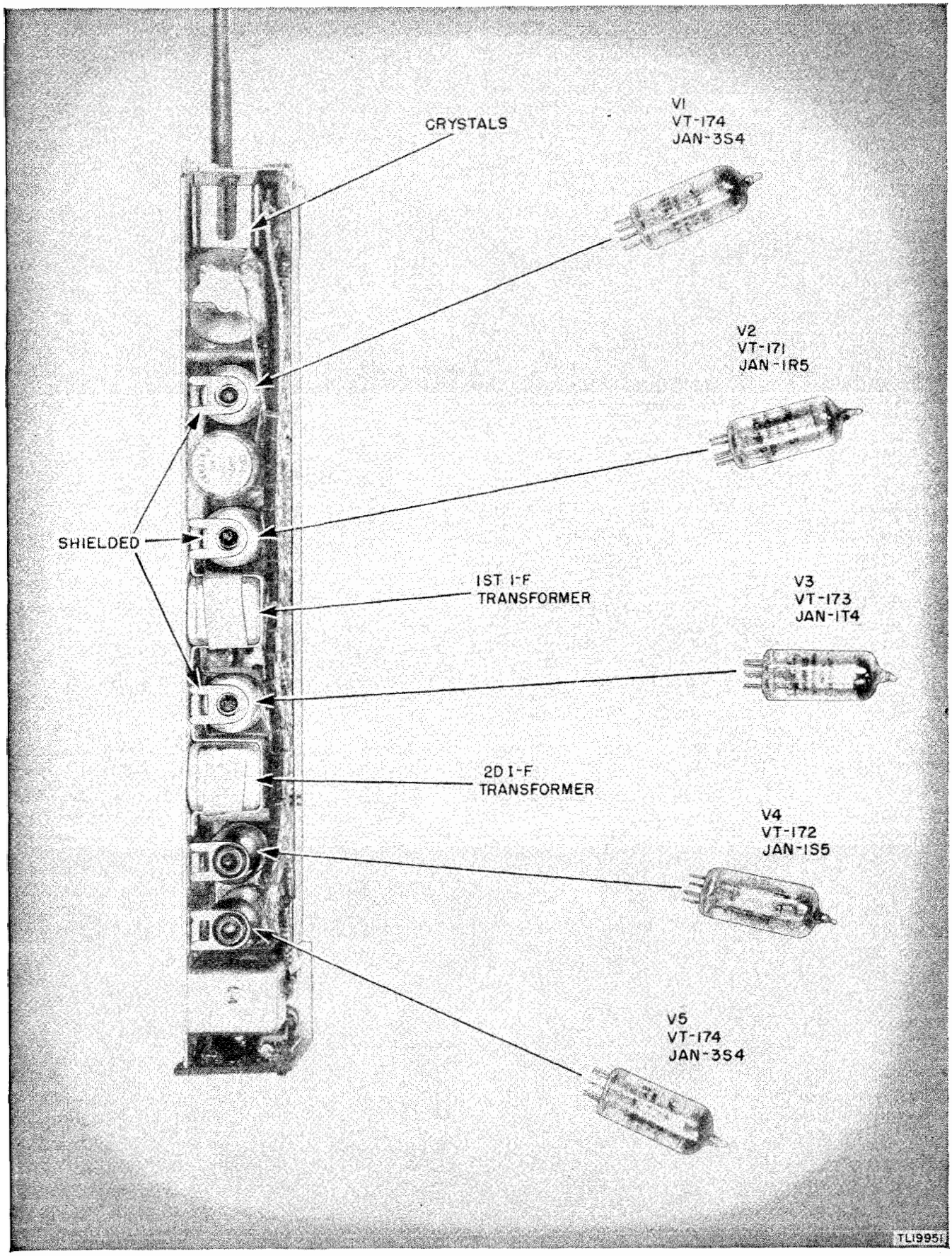

Figure 15. Radio Receiver and Transmitter BC-611-(*), top view of chassis.

heavily paraffined for protection from moisture, a pocket knife or other suitable tool should be used to completely remove this insulating coating from the battery terminals before installation. Insert batteries flat end first, with the positive (raised center button) end toward the bottom of the case. The positive ends of both batteries are marked with a large plus (+) sign for daylight identification. The small raised center button can serve for identification in the darkness.

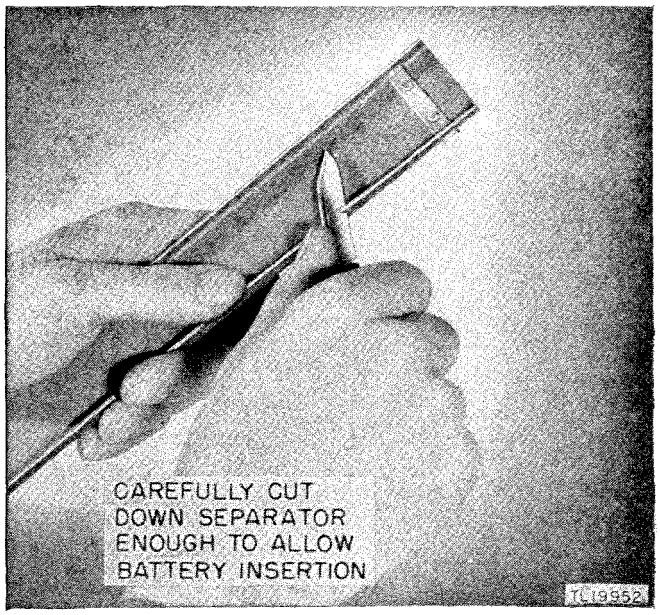

Figure 16. Alteration of fiberboard separator.

(2) Occasionally the fiberboard **U**-shaped separator between the square B battery compartment and the housing, behind which the leads from the earphone and microphone are brought down to the MIKE and PHONE jacks, prevents the insertion of the heavily paraffined B battery. If such a situation arises, remove the separator by pressing it away from the housing wall with the thumbs through the two end openings in the housing. Neatly trim the folded edges of the separator with a pocket knife before returning it. This reduces the space allowed for the microphone and earphone leads, but permits easier insertion and removal of the B batteries. (See fig. 16.)

14. Repacking

a. To repack Radio Set SCR–536–(*) for shipment, perform the unpacking procedure (fig. 14) in reverse order.

b. Reseal the moistureproof bag by making several tight folds and securing the closure with staples. Seal the completed fold with scotch tape or similar adhesive.

c. After the packing box has been nailed shut, bind it with bale wire or metal straps.

PART TWO

OPERATING INSTRUCTIONS

Note. For information on destroying the equipment to prevent enemy use, see the destruction notice at the front of this manual.

Section III. CONTROLS AND THEIR USE

15. General

Radio Set SCR–536–(*) is designed for operation under battle conditions. The number of controls, therefore, has been kept at a minimum to free the operator from time-consuming adjustments.

16. Turning Set On and Off

Extending the bottom section of the telescopic rod antenna operates the on-off toggle switch, located near the bottom panel. (See fig. 7.) When the antenna is fully collapsed the set is automatically turned off.

17. Receiving and Transmitting

A rubber-covered press-to-talk switch is mounted on the side of the case. When held down, it operates the change-over switch that converts the set from a receiver to a transmitter. (See figs. 6 and 7.) The press-to-talk switch is mounted so as to be operated by pressure of the finger tips of the left hand when the set is held in the normal operating position.

18. Controlling Volume

No volume control is present on this set. The volume in the earphone is fixed at a normal level by the design of the set. Increased volume can be obtained by intelligent location of the radio sets, by the use of fresh batteries, and by speaking at a suitable voice level during transmission. Volume may be reduced by collapsing the top sections of the antenna. The bottom section must remain partially extended to insure that the set is not turned off.

19. Tuning

The operator is not required to make tuning adjustments of any kind. Presetting to desired frequency is accomplished by authorized personnel only.

Section IV. OPERATION

20. Starting Procedure

After the receiver and the transmitter have been preset to the frequency on which operation is desired and batteries have been installed, the set is ready for operation. Remove the antenna cap and screw it onto the mounting stud. Extend the antenna to put the set in operation. (See fig. 17.)

21. Siting

A primary cause of poor reception and transmission may be signal-absorbing objects. When locating radio sets, avoid natural obstacles such as trees, foliage, hills, cliffs, and valleys; and man-made obstacles such as buildings, bridges, telephone and power lines, fences, and railroad tracks. Also try to keep the straight-line distance between the radio sets as free of such objects as possible. Operation will often be improved by moving one or both sets to new locations. Place the sets as high as possible, on top of a hill or building, to help increase the range of operation. Be sure that the antenna is fully extended, held as nearly as possible to a vertical position, and clear of obstructions for several feet around it. Figure 18 illustrates good and bad locations for Radio Set SCR–536–(*). When operating in underbrush, keep the antenna from coming in contact with branches or foliage.

Figure 17. Turning set on.

22. Camouflaging

Knowledge of how to camouflage the radio set is as important as knowing how to operate it. A poorly concealed radio set will draw enemy fire, regardless of how well the operator may be hidden or covered. For instance, large truck-drawn radio sets have been completely redesigned to look like ordinary cargo trucks, making it difficult for enemy observers to identify them as radio trucks.

a. Location. No simple camouflage method is effective when the operator, the radio set, or the antenna is silhouetted against an unbroken skyline. Although elevated sites are excellent from a technical standpoint, they must be avoided unless the tactical situation permits such location.

b. Antenna. (1) Against a grassy background, or one with trees and shrubs, the antenna may be made less visible by smearing on a dark material such as graphited grease (Grease, Graphited, Ordnance Spec AXS–683). At least ½ inch at the bottom of the lower section must be left uncoated to reduce the possibility of grounding the antenna to the housing through the coating. Any coating material must be wiped off before the antenna is collapsed.

(2) An alternate method of camouflaging the antenna is to wrap it spirally with a strip of burlap or olive-drab cloth about 2 inches wide. This provides satisfactory concealment, but the cloth has a tendency to become unwound. This method cannot be used in wet weather as leakage from the antenna to the case will seriously reduce the range of the set.

c. Radio Set. The most satisfactory way to camouflage the set itself is to insert it in an issue drab sock. The use of natural plant materials tied to the radio set is effective wherever terrain conditions permit their use. Plants used must be fresh and should be replaced whenever they start to wilt. The set may also be concealed by draping a field jacket, burlap sack, or piece of camouflage-painted scrim netting over the radio set and the operator's arm and shoulder. Except for the sock, these methods are unsatisfactory in windy weather and if tactical conditions require frequent changes of position, it is difficult to keep the camouflage materials in place.

23. Receiving

The set functions as a receiver when the press-to-talk switch is not pressed. Any attempt to grasp the case firmly with the left hand may result in inadvertently depressing the press-to-talk switch. (See fig. 19). When holding the set, adequate support is

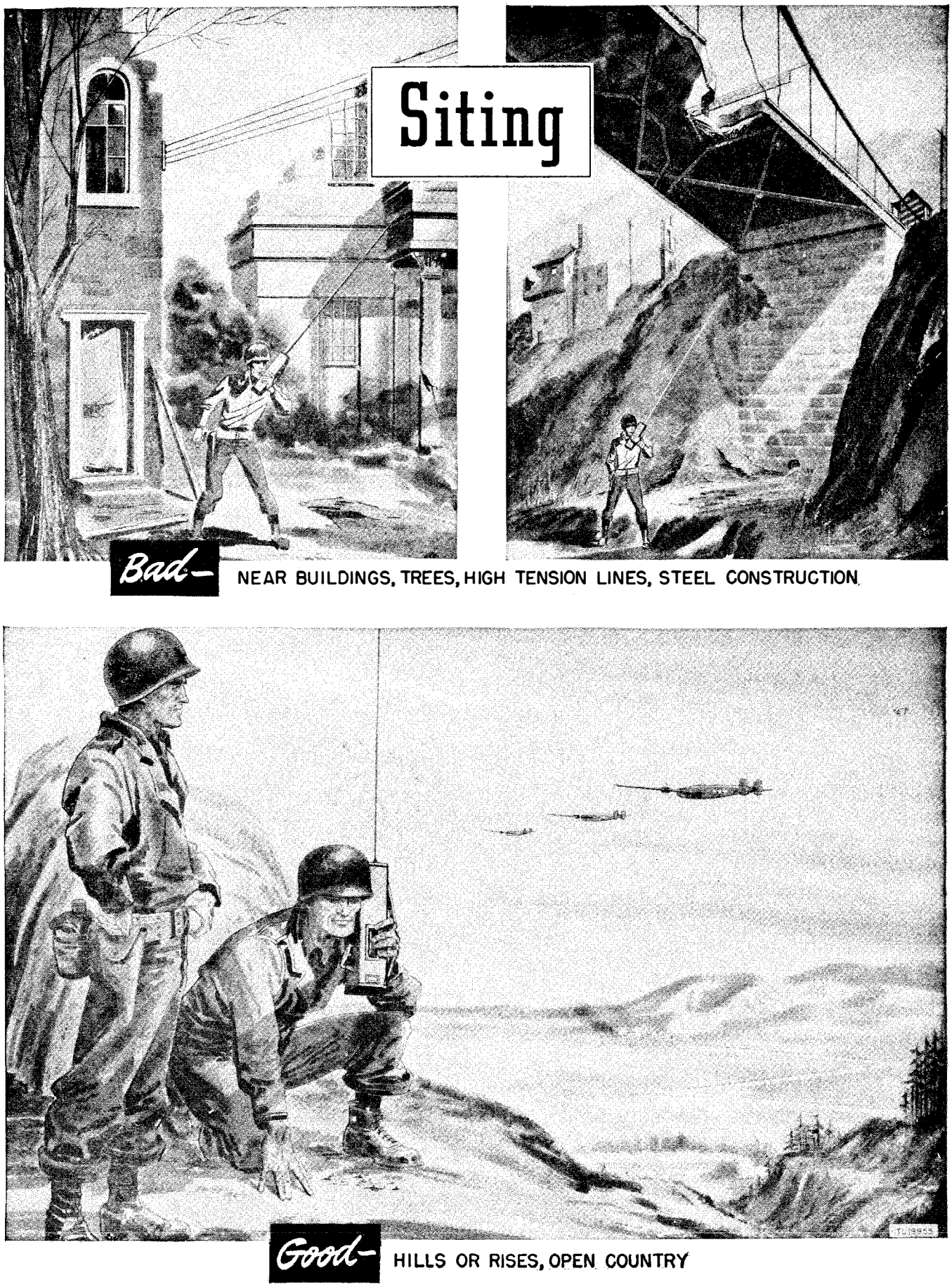

Figure 18. Siting.

Figure 19. Radio Set SCR-536-(*), receiving position.

provided by the taut carrying strap across the back of the left hand while the weight of the case is supported in the angle of the thumb and the palm of the hand. When operating the set for long periods it will be found less tiring to carry the set slung over the left shoulder rather than to carry it in the hand. To carry it in this manner, lengthen the strap and sling the set over the shoulder, cupping it with slight pressure from the arm, or resting it in the crook of the elbow. The sound caused by one station calling another can be heard, even though the earphone is several inches from the ear.

24. Transmitting

a. To transmit, hold in the press-to-talk switch on the side of the housing and speak directly into the microphone. (See fig. 20.) Talk in a moderately loud voice. Speaking softly may be necessary to prevent over-modulation and distortion and, over short distances, overloading of the receiver. The normal atmospheric noises common to radio transmission, plus the background noises picked up by the microphone in addition to the message, require careful enunciation of each syllable *at all times* even at the expense of sounding monotonous. In cases of exceptional atmospheric static, heavy radio interference, or enemy jamming attempts, messages may be more reliably transmitted by whistling or speaking (dit-dah) Morse characters into the microphone.

b. Take care that the press-to-talk switch is depressed *before* starting to speak, and is released immediately upon completion of conversation. In the beginning, the operator may experience some difficulty in synchronizing the operation of the press-to-talk switch with the beginning and end of his speech. There is a natural tendency to hold the switch before starting to speak and to continue to hold it after completing a transmission. A little practice will eliminate this difficulty. It is good practice to pause for a moment after pressing the press-to-talk switch.

25. Net Operation

For two-way conversation, two or more sets adjusted to operate on the same frequency are required. Two sets operating on different frequencies will be

Figure 20. Radio Set SCR-536-(*), transmitting position.

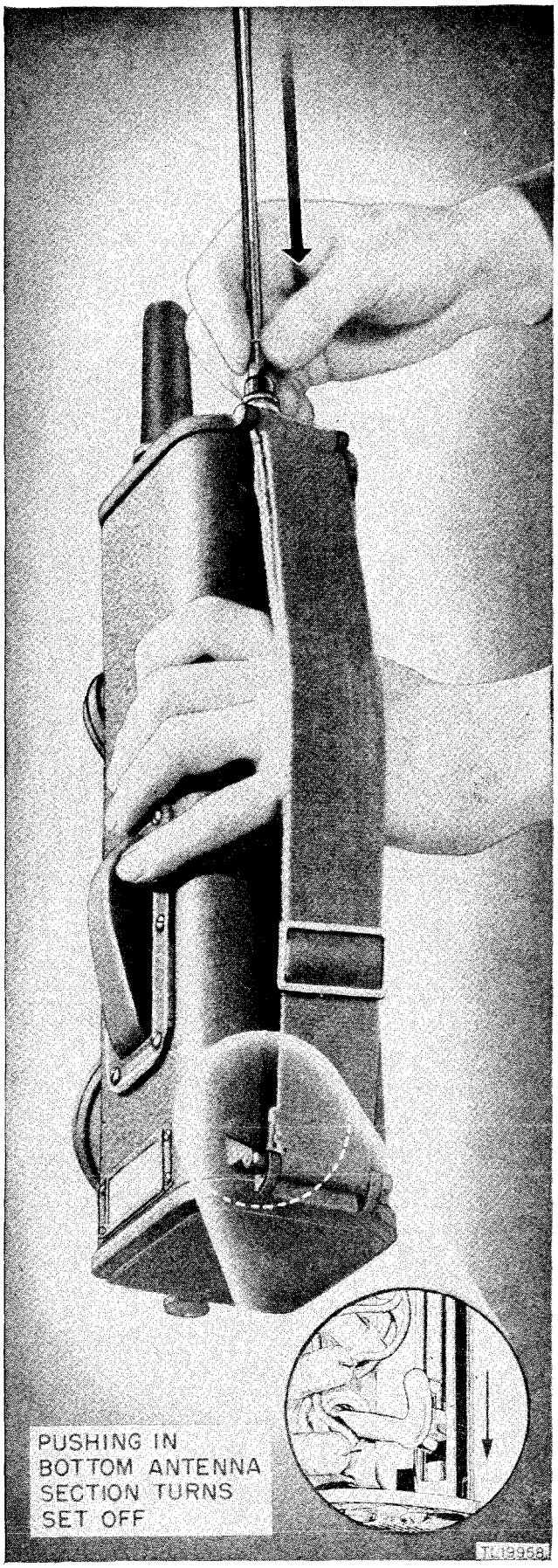

Figure 21. Turning set off.

unable to converse. There is no limit to the number of sets that can be operated together in the same net, other than the distance limitation over which these sets are effective. However, more than one set transmitting at the same time on the same frequency is likely to cause confusion in spite of strictest adherence to operating procedure. Radio Set SCR–536–(*) also can be used for voice communication with other types of radio sets adjusted to the same frequency (par. 3) and can receive *tone* transmission of Morse characters. Continuous-wave (c-w) signals *cannot* be heard.

26. Stopping Procedure

Telescope the antenna into the case after operation. Push the bottom section of the antenna rod into the case *as far as it will go.* (See fig. 21.) This will turn off the set. The snap of the toggle switch will be heard. Remove the antenna cap from the threaded mounting stud and replace it over the collapsed antenna. If the set is to be stored for any length of time, unlatch the bottom cover and remove both batteries.

Section V.

EQUIPMENT PERFORMANCE CHECK LIST

27. Purpose and Use of Check List

a. General. The following equipment performance check list will help the operator determine whether Radio Set SCR–536–(*) is functioning properly. The check list gives the item to be checked, the conditions under which the item is checked, the normal indication, and the corrective measures the operator can take in case of abnormal indications.

b. Action or Condition. The situations tabulated in the action or condition column are all part of the normal operating routine and will, in time, become automatic each time the radio set is put into operation.

c. Normal Indications. The radio set is not equipped with pilot lights, meters, or dials to provide indications of correct operation. The operator must familiarize himself with the normal visual and audible indications of proper performance.

d. Corrective Measures. The corrective measures listed are those that the operator can make without turning the equipment in for repairs. If

the corrective measures listed do not rectify the trouble, the set must be turned over to authorized repair personnel.

e. ITEMS 1 TO 4. Items 1 to 4 should be checked each time the equipment is put into operation.

f. ITEMS 5 AND 6. Items 5 and 6 are checked when beginning operation.

g. ITEMS 7 TO 9. These items represent general operating characteristics of the set. The operator must become familiar with the characteristics of the set during normal operation; he must use that knowledge as a basis for recognizing faults when the set is not operating properly.

h. ITEMS 10 AND 11. Items 10 and 11 are checked when the equipment is taken out of operation. Any abnormal indications at this time are probably caused by trouble in the set, and should be corrected before the next expected period of operation.

28. Equipment Performance Check List

	Item No.	Item	Action or condition	Normal indications	Corrective measures
PREPARATORY	1	Carrying strap.	Adjusted taut.		
	2	Data card.	Entries completed.		
	3	Batteries.	Inserted correctly.		
	4	Antenna cap.	Remove cap and attach to threaded stud.	Chain not wrapped around antenna. No fouling.	
START	5	Antenna.	Extend antenna.	Click of on-off switch.	See paragraph 90.
	6	Earphone.	Held near ear.	Background noise from receiver.	*a.* Scrape battery terminals and housing contacts *b.* Replace both batteries. *c.* Check PHONE connection under bottom cover.
	7	Press-to-talk switch.	Depressed.	Normal friction of sliding contacts of change-over switch.	See paragraph 88.
EQUIPMENT PERFORMANCE	8	Microphone.	Talk, blow, or whistle.	Sidetone in earphone.	Check MIKE and PHONE connections under bottom cover.
	9	Radio Receiver and Transmitter BC–611–(*)	Call party and release press-to-talk switch	Answering signal may be heard in earphone.	*a.* Check for same frequency on cards of both sets. *b.* Further check by moving to better location.
STOP	10	Antenna.	Collapse and replace cap.	Click of on-off switch. Receiver background noise ceases.	
	11	Batteries.	Remove and store separately from set when not operating.		

PART THREE

MAINTENANCE INSTRUCTIONS

Section VI. PREVENTIVE MAINTENANCE TECHNIQUES

29. Meaning of Preventive Maintenance

Preventive maintenance is a systematic series of operations performed at regular intervals on equipment, when turned off, to eliminate major break-downs and unwanted interruptions in service, and to keep the equipment operating at top efficiency. To understand what is meant by preventive maintenance, it is necessary to distinguish between preventive maintenance, trouble shooting, and repair. The prime function of preventive maintenance is to *prevent* break-downs and, therefore, the need for repair. On the other hand, the prime function of trouble shooting and repair is to locate and correct *existing* defects. The importance of preventive maintenance cannot be overemphasized. The entire system of radio communication depends upon each set's being *on the air* when it is needed and upon its *operating efficiency*. It therefore is vitally important that radio operators and repairmen maintain their radio sets properly. (See TB SIG 123.)

Note. The operations in sections VI and VII are first- and second-echelon (organization operators and repairman) maintenance. Some operations in sections VIII, IX, and X are higher echelon maintenance.

30. Description of Preventive Maintenance Techniques

a. General. Many of the parts used in Radio Set SCR-536-(*) require routine preventive maintenance in addition to the careful handling that is normally accorded even the most rugged radio equipment. Because hit-or-miss maintenance techniques cannot be applied with any degree of effectiveness, definite and specific instructions are needed. This section of the manual contains these specific instructions and serves as a guide for personnel assigned to perform the six basic maintenance operations, namely: Feel, Inspect, Tighten, Clean, Adjust, and Lubricate. Throughout this manual the lettering system for the six operations will be as follows:

F—Feel*
I—Inspect
T—Tighten
C—Clean
A—Adjust
L—Lubricate*

The first two operations establish the need for the other four. The selection of operations is based on a general knowledge of the field needs. For example, the dust encountered on dirt roads during cross-country travel filters into equipment no matter how much care is taken to prevent it. Rapid changes in weather (such as heavy rain followed by blistering heat), excessive dampness, snow, and ice tend to cause corrosion of exposed surfaces and parts. Without frequent insepctions and the necessary performance of tightening, cleaning, and adjusting, equipment becomes undependable and subject to breakdown when it is most needed.

b. Feel.* The feel operation is used most often to check rotating machinery, such as blower motors and drive motors, bearings, and bushings, and to determine whether electrical circuit components are overheated. Feeling indicates the need for lubrication and the existence of circuit defects requiring correction.

c. Inspect. Inspection is the most important operation in the preventive maintenance program. A careless observer will overlook the evidences of minor trouble. Although these defects may not interfere with the performance of the equipment, valuable time and effort can be saved if they are corrected before they lead to major break-downs.

* The Feel and Lubricate operations are inapplicable to preventive maintenance of Radio Set SCR-536-( ).

Make every effort to become thoroughly familiar with the indications of normal functioning, in order to be able to recognize the signs of a defective set. Inspection consists of carefully observing all parts of the equipment, noticing their color, placement, and state of cleanliness. Inspect for the following conditions:

(1) Overheating, as indicated by discoloration, blistering, or bulging of the parts or surface of the container; leakage of insulating compounds; and oxidation of metal contact surfaces.

(2) Placement, by observing that all leads and cabling are in their original positions.

(3) Cleanliness, by carefully examining all recesses in the units for accumulation of dust, especially between connecting terminals. Parts, connections, and joints should be free of dust, corrosion, and other foreign matter. In tropical and high-humidity locations, look for fungus growth and mildew.

(4) Tightness, by testing any connection or mounting which appears to be loose.

d. TIGHTEN, CLEAN, AND ADJUST. These operations are self-explanatory. Specific procedures to be followed in performing them are given wherever necessary throughout part three of this manual.

Caution: Screws, bolts, and nuts should be tightened carefully. Fittings tightened beyond the pressure for which they are designed will be damaged and broken. Whenever a loose connection is repaired, it should be moistureproofed and fungiproofed again by applying the varnish with a small brush. See section IX for details of moistureproofing and fungiproofing.

e. LUBRICATE.† Lubrication ordinarily refers to the application of grease or oil to the bearings and shafts of motors or other rotating parts, door hinges, sliding surfaces, and wherever minimum wear due to friction is desirable. Lubrication may also be interpreted to include the various special uses of lubricants that may apply in many different ways to various items of equipment.

† The Feel and Lubricate operations are inapplicable to preventive maintenance of Radio Set SCR-536-(*).

Section VII. ITEMIZED PREVENTIVE MAINTENANCE

31. Introduction

For ease and efficiency of performance, preventive maintenance on Radio Set SCR-536-(*) is broken down into operations that are performed at different time intervals. In this section the preventive maintenance work to be performed on the radio set at specified time intervals is broken down into units of work called items. The general techniques involved and the application of the FITCAL operations in performing preventive maintenance on individual parts are discussed in section VI. These general instructions are not repeated in this section. When performing preventive maintenance, see section VI if more information is required for the following items. All work is performed with the batteries removed from the housing. After preventive main-

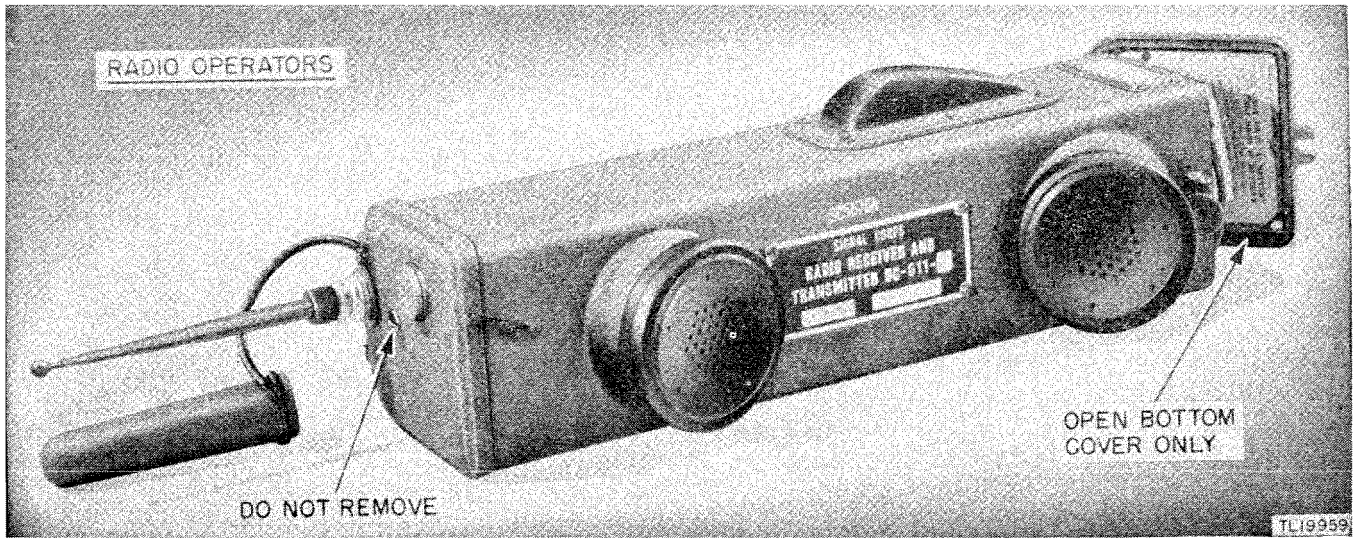

Figure 22. Instructions to operators.

tenance has been performed on a given day, the equipment should be put into operation and checked for satisfactory performance. (See par. 28.)

Note. Radio operators are cautioned to make no adjustments or repairs on parts that cannot be reached by removing covers held only by snap fasteners or thumb screws. The top screw holding the chassis in the housing and the six screws holding the press-to-talk switch cover in place must not be removed by other than authorized repair personnel. (See fig. 22.)

32. Preventive Maintenance Tools and Materials

The following tools and materials will be needed in performing preventive maintenance:

Knife TL–29 (or any personal pocket knife).
#0000 sandpaper (for removing corrosion and rust).
Crocus cloth (for cleaning points of electrical contact).
Clean cloth (for wiping and dusting).
Toothbrush (for cleaning in cramped places).
Solvent, dry-cleaning.

Note. Gasoline will not be used as a cleaning fluid for any purpose. Solvent, dry-cleaning, is available as a cleaning fluid through established supply channels. Oil, fuel, Diesel, may be used for cleaning purposes when dry-cleaning solvent (SD) is not at hand. Carbon tetrachloride will be used as a cleaning fluid only on electrical wiring and electrical mechanisms which cannot be cleaned with an inflammable solvent because of the fire hazard.

33. Item 1, Exterior of Radio Set SCR–536–(*)

a. INSPECT. (1) Check the case for dirt, scratches, dents, or other damage.

(2) Look for breaks or weaknesses in the flexible cover over the press-to-talk switch, and damage to the microphone and earphone caps. Remove microphone and earphone caps to permit closer inspection of the units. (See fig. 23.) See that the thin cones under the microphone and earphone caps are free from dust and undamaged.

(3) Check the press-to-talk switch for signs of looseness.

(4) Check the jacks used to connect external units on Radio Set SCR–536–F. See that they are clean and undamaged, and that the cover fits properly in place. (See fig. 8.)

(5) See that the top and bottom covers fit securely.

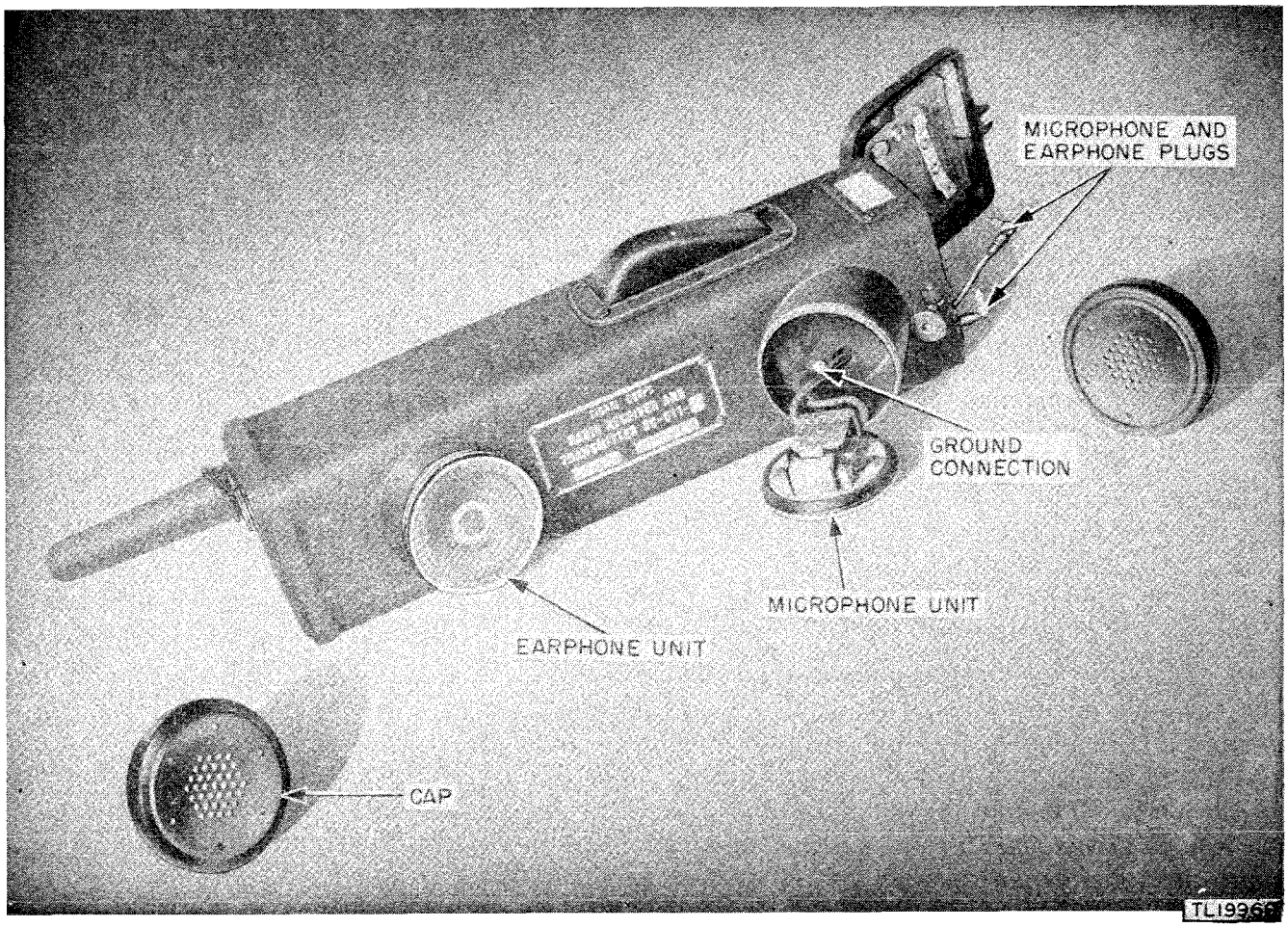

Figure 23. Radio Set SCR–536–(*), microphone and earphone caps removed.

(6) See that the data card is properly in place and covered. (See fig. 6.)

b. TIGHTEN. (1) Carefully tighten any loose screws.

(2) If the press-to-talk switch cover has worked loose, reseal it with Permatex (Permatex, Aviation Type, Signal Corps stock No. 6G1514). For supplementary waterproofing information, see section X.

(3) Replace the microphone and earphone caps and see that they are screwed on snugly.

c. CLEAN. (1) Remove any caked mud with a small brush. Remove any grease or oil with dry-cleaning solvent.

(2) Carefully dust exposed surfaces of earphone and microphone units and protective caps with a clean dry cloth.

34. Item 2, Antenna

a. INSPECT. (1) Inspect the antenna insulator carefully, particularly in inclement weather. (See fig. 11.) Water and foreign matter will provide a leakage path, grounding the output signal to the case.

(2) Inspect the individual antenna sections, especially around the three joints, to detect any signs of damage due to rough handling. (See fig. 7.)

(3) Check the fitting of the antenna cover and retaining chain.

b. CLEAN. Clean the antenna insulator and the extended antenna sections with a dry cloth. Use dry-cleaning solvent if necessary, especially after having covered the antenna with foreign matter for purposes of camouflage. (See par. 22.)

35. Item 3, Inside Bottom Cover

a. INSPECT. (1) Check the spring contact connections in the inside bottom cover and the battery contact studs on the chassis to insure that they are clean and bright and that there is sufficient spring pressure. (See fig. 6.) Inspect the panel of the chassis, which is exposed when the bottom cover of the housing is unlatched, to see that it is clean and free from dust.

(2) The plug from the internal microphone is painted with a green spot to match the green spot on the socket labeled MIKE, and the internal earphone plug is painted with a red spot to match the spot on the socket labeled PHONE. Check to make sure that the plugs are inserted correctly and that they fit snugly and can not become disengaged. (See fig. 6.)

(3) Make sure that the black plate circuit jumper plug inserted across the socket labeled PLATE METER fits snugly. (See fig. 6.) To prevent loss tie a thread or piece of serving twine around the jumper plug and, after allowing a little slack, to one of the mounting studs of the battery contact plate in the bottom cover assembly.

(4) Check the jacks used for external microphone and headset connections. See that the contact points are clean and bright.

b. TIGHTEN. Carefully tighten any loose screws or connections.

c. CLEAN. (1) Remove any corrosion or dullness from battery contact points (fig. 12) with a pocket knife.

(2) Wipe the cover plate clean.

d. ADJUST. If necessary, bend the spring contact connectors outward slightly so as to press firmly on the raised button of the batteries. (See fig. 6.) Be very careful not to break the spring connectors by bending them too much or too sharply. Do not attempt to adjust the tension of the coil spring contacts on sets using the bottom cover containing external microphone and headset jacks. (See fig. 8.)

36. Item 4, Chassis and Interior of Radio Set SCR–536–(*)

a. INSPECT. (1) After removal of the chassis, check the tubes for proper seating. (See fig. 15.) Make the inspection by pressing the tubes down in their sockets and carefully testing them in that position, not by partially withdrawing the tubes and jiggling them from side to side. Inspect the tube socket.

(2) Make certain that crystals and coils are properly held in place. The self-supporting ANTENNA coil is light in weight and requires no special holding bracket, but it should be inspected for proper seating.

(3) Look for blistering, discoloration, or other signs of overheating or abnormal operation; and inspect for loose parts on the chassis.

(4) After removal of the chassis from the case, extend the antenna to make sure that there is nothing obstructing the free movement of the antenna and that the antenna guide and supporting insulator are in good condition. (See fig. 31.)

(5) When the top cover is removed to permit removal of the chassis, also inspect the top battery connectors and the A battery spacer. (See fig. 10.)

(6) Inspect the antenna contacts for loose electrical connections. (See fig. 31.)

(7) Check the operation of the on-off switch at the base of the antenna.

(8) Make sure moistureproofing and fungiproof-

ing treatment is still intact, and that moisture or microscopic plant life is not present on the chassis.

(9) Check to see that the guides on the inside of the case are unobstructed, and that the projections on the chassis are not bent. (See fig. 61.)

b. TIGHTEN. (1) Any loose chassis connections should be carefully soldered.

(2) The TANK COIL holding screw should be firmly tightened to hold the coil in place.

(3) If the on-off switch is loosely mounted, carefully turn down the hexagonal mounting nut.

(4) When maintenance is completed and batteries are replaced, press the bottom cover firmly against some solid object, such as a tree stump, and tighten the latching nut securely with the fingers.

c. CLEAN. (1) Wipe any dirt or grime from the chassis and parts with a clean dry cloth or a small brush. Tubes seldom require cleaning, but they should be cleaned carefully whenever necessary.

(2) Carefully clean any dirty contact points with crocus cloth and wipe clean. Take care not to damage the operation of the change-over switch.

d. ADJUST. (1) If necessary, make very careful adjustments of the change-over switch contacts and antenna contacts.

(2) Carefully bend the chassis projections slightly, if necessary, to assure that the chassis slides in and out of the case freely. (See fig. 66.)

(3) Change the position of any misplaced wiring or parts that are being damaged by chassis removal.

37. Preventive Maintenance Check List

The following check list is a summary of the preventive maintenance operations to be performed on Radio Set SCR–536–(*). The time intervals shown on the check list may be reduced at any time by the local commander. The echelon column indicates which operations are first-echelon maintenance and which operations are second-echelon maintenance. Operations are indicated by the letters of the word FITCAL. For example, if the letters ITCA appear in the "Operations" column, that item must be inspected (I), tightened (T), cleaned (C), and adjusted (A).

38. Factors Determining Preventive Maintenance Periods

a. USE. If field operations require use of the equipment for periods longer than the normal periods (4 hours daily), more frequent checks should be scheduled. This applies especially to equipment in combat areas.

Item No.	Operations	Item	When performed							Echelon
			Before operation	After operation	Daily	Weekly	Monthly	Semiannually	Yearly	
1	ITC	Exterior of Radio Set SCR–536–(*).	X	X						1
2	IC	Antenna.....	X	X						1
3	ITCA	Inside bottom cover.	X	X						1
4	ITCA	Chassis and interior of set.				X				2

F*	I	T	C	A	L*
Feel	Inspect	Tighten	Clean	Adjust	Lubricate

* Feel and Lubricate items are not applicable to preventive maintenance for Radio Set SCR–536–(*).

b. THEATER. The weather and climatic conditions of the theater in which the unit is being used also determine how often the set should be checked. Some of the climatic conditions that should be considered are—

(1) *High temperature.* Extremely hot weather accompanied by high humidity requires more frequent checking. The set should be dried out often to avoid fungus growth and insulation failures. Although the set has been processed with moisture-proofing and fungiproofing varnish, moisture can still form. The condition of the varnish should be checked frequently and the date of the last MFP treatment should be noted. If necessary, the set should be retreated as outlined in section IX.

(2) *Extreme cold and high humidity.* With high humidity, moisture seeps into the set when the temperature rises. When the temperature falls, the moisture freezes. Inspect the set more often in areas where there are frequent and extreme changes in weather conditions.

c. PERFORMANCE. If the over-all performance of Radio Set SCR–536–(*) falls below normal sooner than checks are scheduled, additional checks should be made. If this occurs on all or many sets in an area, more frequent checks should be scheduled.

Section VIII. LUBRICATION

39. Lubrication Instructions

a. General. No lubrication is authorized for Radio Set SCR–536–(*) for either reduction of friction between moving parts or for the prevention of corrosion.

b. Camouflage. Use of a graphited grease to reduce the reflected glare from the extended antenna is described in paragraph 18.

c. Waterfrooofing. Use of waterpump grease for waterproofing the case of the set in addition to the moisture seals built into the set (par. 10) is described in paragraph 46.

40. Recommended Lubricants for Camouflaging and Waterproofing

The following table lists the lubricating material recommended for use in camouflaging and waterproofing Radio Set SCR–536–(*).

Approved symbol	Standard nomenclature	Specification No.
CG	Grease, Graphited.	Ordnance AXS–683
WP	Grease, Water Pump, No. 4.	U. S. Army 2–109

Section IX. MOISTUREPROOFING AND FUNGIPROOFING

41. Problems Encountered

The operation of Signal Corps equipment in tropical areas where temperature and relative humidity are extremely high requires special attention. The following items represent problems which may be encountered in operation:

a. Resistors, capacitors, coils, chokes, transformer windings, and other components fail.

b. Electrolytic action takes place in resistors, coils, chokes, and transformer windings causing eventual break-down.

c. Hook up wire and cable insulation break down. Fungus growth accelerates deterioration.

d. Moisture forms electrical leakage paths on terminal boards and insulating strips.

42. Treatment

A moistureproofing and fungiproofing treatment has been devised which, if properly applied, provides a reasonable degree of protection against fungus, insects, corrosion, salt spray, and moisture. The treat-

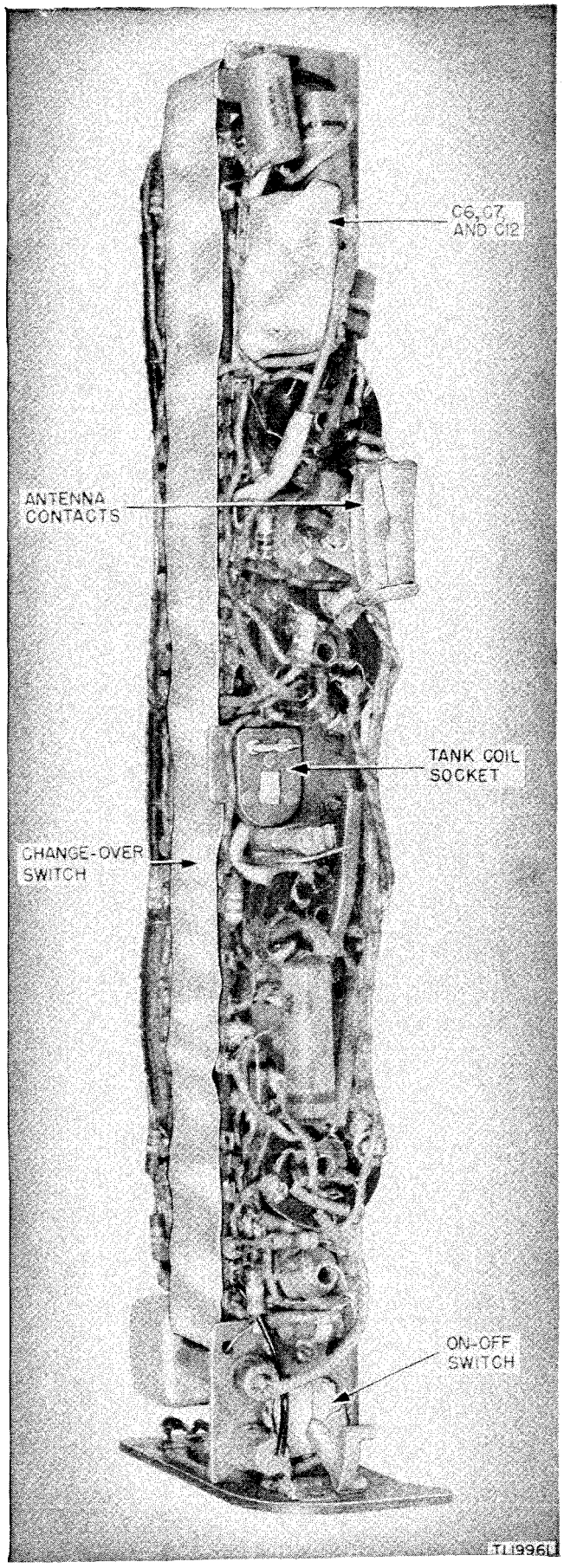

Figure 24. Radio Receiver and Transmitter BC–611–(*) (except BC–611–F), bottom of chassis, showing masking.

ment involves the use of a moisture- and fungi-resistant varnish applied with a spray gun or brush. See TB SIG 13 for a detailed description of the varnish-spray method of moistureproofing and fungiproofing and the supplies and equipment required in this treatment.

Caution: *Varnish spray may have a toxic effect if inhaled. To avoid inhaling spray, use respirator if available; otherwise fasten handkerchief, cheesecloth, or other cloth material over nose and mouth.*

43. Step-by-step Instructions

a. PREPARATION. Equipment must be in good repair and all adjustments properly made before being processed. Any defective parts should be replaced. The set should be pretuned and aligned and operating satisfactorily so that a check can be made after the treatment and any effect on alignment and presetting more easily corrected.

b. DISASSEMBLY. The equipment is first disassembled partially so that necessary masking and more thorough drying of the equipment can be accomplished, and all parts reached by the varnish. The items marked with an asterisk are not to be treated. Set them aside until reassembly.

(1) Loosen knurled nut holding bottom cover to housing; open bottom cover.

(2) Remove Batteries* BA–37 and BA–38 from battery compartments.

(3) Remove antenna cover from antenna insulator on top cover; attach antenna cover to threaded stud adjacent to antenna.

(4) Remove screw holding top cover; remove cover and replace screw.

(5) Remove MIKE and PHONE plugs from the jacks on the panel.

(6) Remove plate meter jumper.*

(7) Remove chassis from housing by sliding it out of the bottom of the housing.

(8) Remove crystals from sockets, noting their respective positions.

(9) Remove ANTENNA coil* from its socket.

(10) Loosen the holding clamp of TANK COIL;* remove coil.

(11) Remove the screws holding the celluloid designation strip* over the change-over switch; replace screws in the original holes.

(12) Remove the screw holding the antenna guide to the terminal board. Raise the antenna and carefully remove the guide.

(13) Extend the antenna and remove it by pushing through metal clamp riveted to chassis.

Note. On sets procured on Order No. 26827-Phila-41-01, Serial Nos. 15429 and up, the mounting of the antenna has been changed. In these models, a screw fastened by a nut replaces the rivet through the polystyrene base of the antenna coil socket. This facilitates repairs by providing a means of easily detaching the antenna guide.

(14) Remove microphone and receiver caps and lift out units.

c. CLEANING. With the equipment disassembled, a thorough cleaning of the units can be accomplished. This is necessary to prevent sealing in dirt or dust with the varnish. Remove all dirt, corrosion, grease, oil, sand, and gravel, since any of these will prevent a continuous film or seal of varnish. A clean paint brush, such as supplied with moistureproofing and fungiproofing kits, will permit dusting between the closely mounted components on the radio chassis. If available, a blower or compressed air hose is useful in blowing out loose dirt. (If an air hose is used, be sure that any water that may have condensed in it is blown out before applying the air stream to the equipment. Use only air intended for cleaning purposes. Do not blow hard enough to damage or displace any apparatus.) Remove rust or corrosion (which may contain fungus)

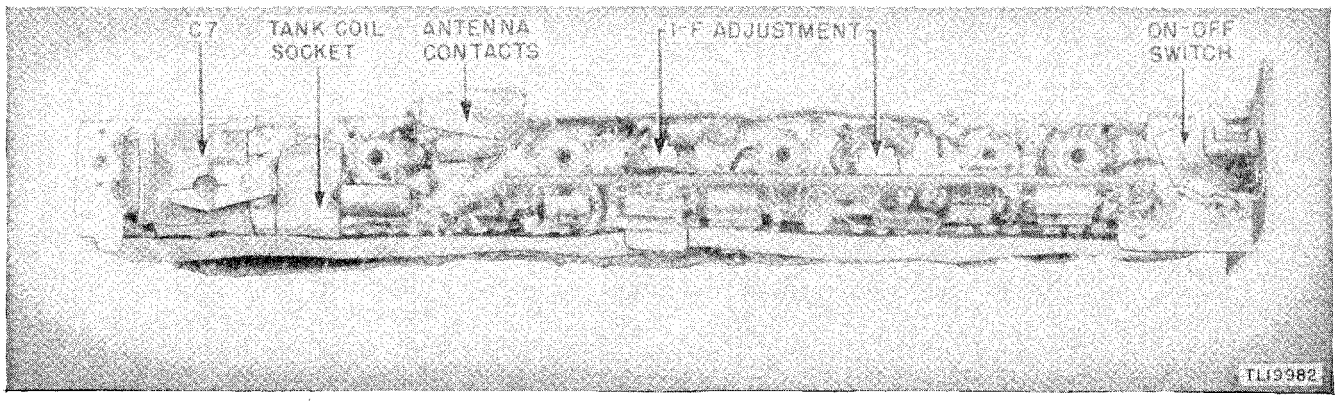

Figure 25. Radio Receiver and Transmitter BC–611–F, bottom of chassis, showing masking.

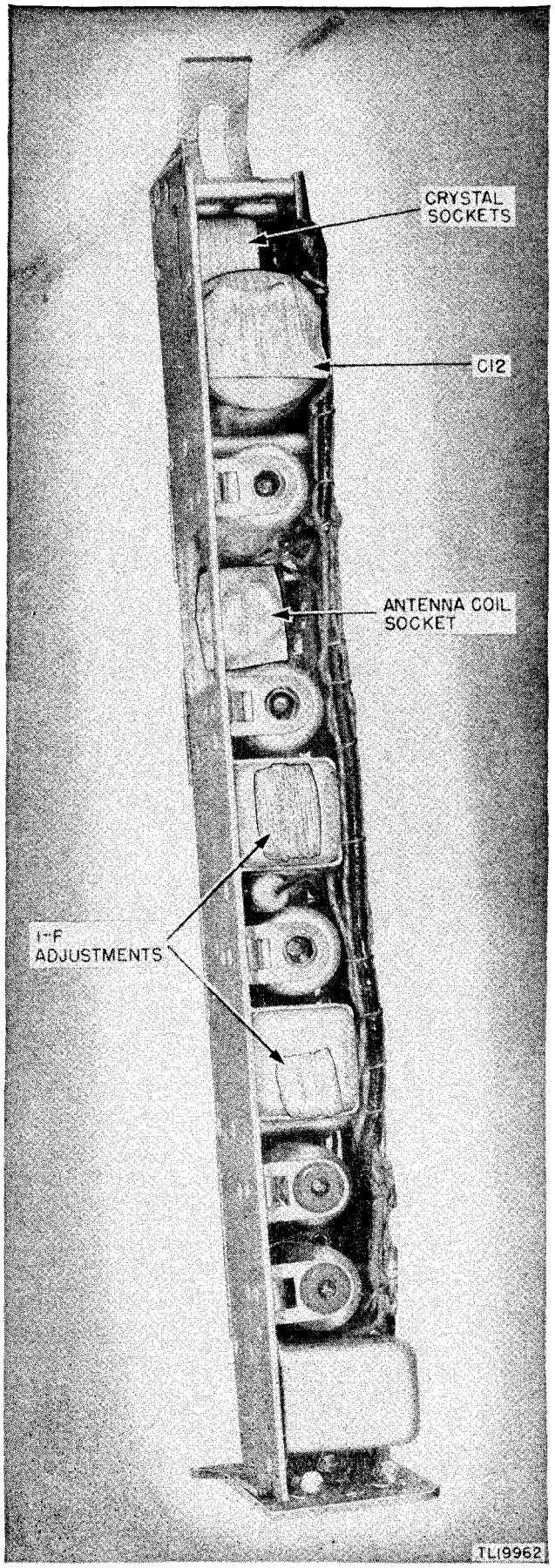

Figure 26. Radio Receiver and Transmitter B-611-(*), top of chassis, showing masking.

with fine sandpaper or by scraping. Remove grease and oil with dry-cleaning solvent.

d. MASKING. After a thorough cleaning, mask all points where the varnish might interfere with electrical continuity, moving parts, air-dielectric capacitors. Cover all screwthreads. The adhesive masking tape supplied for this purpose can be applied directly to the small areas involved in Radio Set SCR-536-(*). (For masking large areas and odd-shaped parts, paper is molded over and around the parts and then held in place with the masking tape.) Mask the following:

(1) Complete length and width of change-over switch (fig. 24), making sure to cover all moving contacts. Work tape around parts with fingers.

(2) Antenna contacts. (See figs. 24 and 25.)

(3) Pins of TANK COIL socket. (See figs. 24 and 25.)

(4) Capacitors C7 and C6 (not used in Radio Set SCR-526-F). (See fig. 24.)

(5) Adjustment screw of capacitor C12. (See fig. 24.)

(6) On-off switch. (See figs. 24 and 25.)

(7) ANTENNA coil socket. (See fig. 26.)

(8) Top of capacitor C12. (See fig. 26.)

(9) Crystal sockets. (See fig. 26.)

(10) Openings in i-f cans (fig. 26) (on Radio Set SCR-536-F model mask top and bottom screw adjustments, figs. 26 and 27).

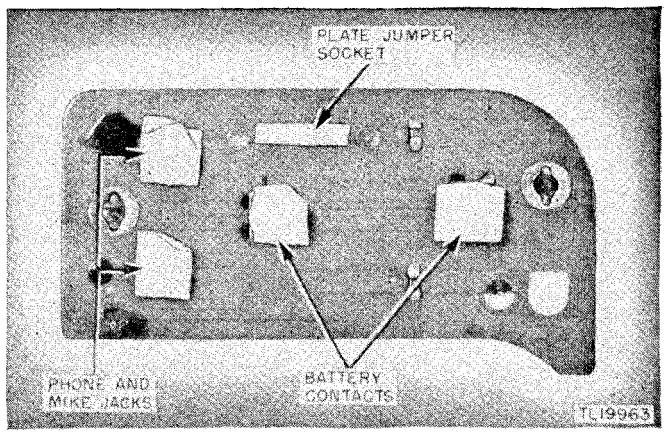

Figure 27. Terminal board, showing masking.

(11) PHONE and MIKE pin jacks. (See fig. 27.)

(12) Plate jumper socket. (See fig. 27.)

(13) Battery contacts. (See fig. 27.) (Mask all contacts on terminal board of Radio Set SCR-536-F.)

(14) MIKE and PHONE plugs. (See fig. 28.)

(15) Battery contacts. (See fig. 28.)

(16) Ground contact. (See fig. 28.)

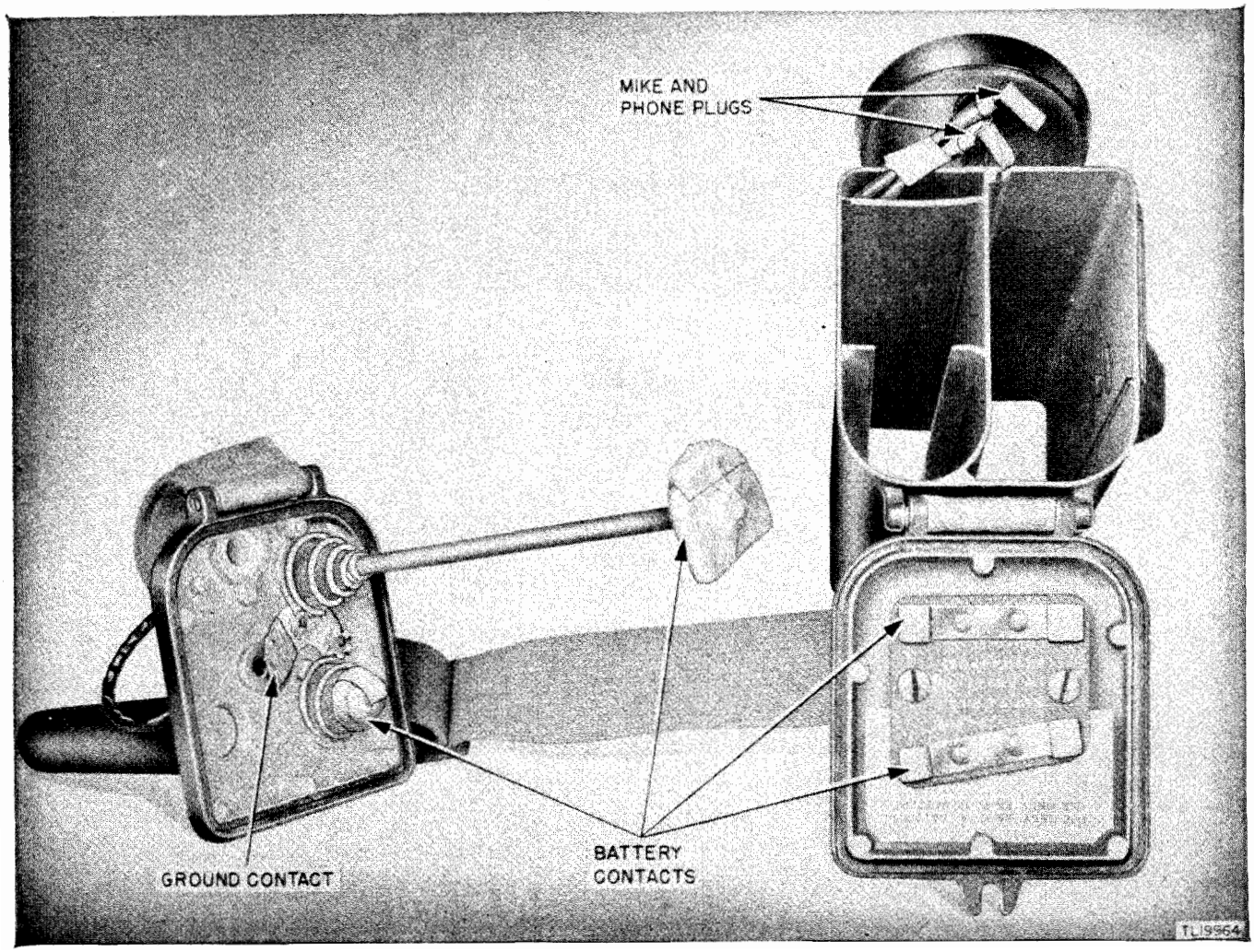

Figure 28. Bottom and top covers, showing masking.

e. DRYING. After cleaning and masking, heat the equipment with electric lamps to expel all residual moisture. This may be done in the open air; or, to prevent wastage of heat, in an oven designed for the purpose, or one improvised from a box. When available, a steel drum or box may be mounted on blocks and heated with a gasoline burner. A field kitchen oven may likewise be used. Dry for 2 or 3 hours at 160° F. Do not exceed the 160° F. temperature. At higher temperatures waxes and insulations may soften to an undesirable degree. Even at correct temperature, inspect the equipment often during the drying operation for evidences of insulation destruction. Use any available controlling thermostats and thermometers. Place the thermostat on top of the equipment if the lights are above the equipment, or in the hottest part of the oven. Turn equipment frequently, about every 30 minutes, to insure even distribution of heat. If an oven is improvised, make sure to put vents near the top and bottom to allow moisture-laden air to be driven off and replaced with fresh dry air. Good circulation provides better drying in minimum time.

Note. In case it is necessary to use a lower drying temperature than 160° F., or if the temperature must be reduced to prevent melting of waxes and insulating compounds, 1 hour must be added to the drying time for every 10° drop below 160° F.

f. VARNISHING. The dried equipment should be sprayed while still hot, as soon as it is removed from the oven. This will prevent reabsorption of moisture from the air before the varnish is applied.

(1) Apply three thin coats of moistureproofing and fungiproofing varnish (Lacquer, Fungus-resistant, Spec No. 71–2202, Signal Corps stock No. 6G1005.3, or equal) to the chassis with a spray gun. Air-dry the equipment without heat between coats until the varnish is no longer tacky (15 to 20 minutes). Touch up parts missed by the spray by hand with a brush. Retouch ends where pigtails enter resistors and capacitors, ends of insulation around wiring, and wiring hidden by the masking,

such as the connections to the MIKE, PHONE, and PLATE METER jacks.

(2) Hold crystals by contact pins and apply one dip coat of varnish, being careful to keep varnish off contact pins.

(3) Apply varnish with brush to back of microphone and earphone units and to the TANK COIL.

g. REASSEMBLY. (1) After varnish is dry, remove the masking tape from all components.

(2) Remove sticking adhesive with dry-cleaning solvent.

(3) Using a brush, retouch any spots where the varnish is peeled off when removing the masking.

(4) Reassemble by following disassembly instructions in reverse order.

(5) Test for correct presetting and alignment.

h. MARKING. Mark the letters MFP and the date of the treatment on the nameplate.

Example: MFP—8 Mar 1945.

Note. Sets moistureproofed and fungiproofed by the manufacturer are so marked on the chassis. (See fig. 29.)

44. Moistureproofing and Fungiproofing After Repairs

If, during repair, the coating of protective varnish has been punctured or broken, and if complete treatment is not needed to reseal the equipment, apply a brush coat to the affected part. Be sure that the break is completely sealed.

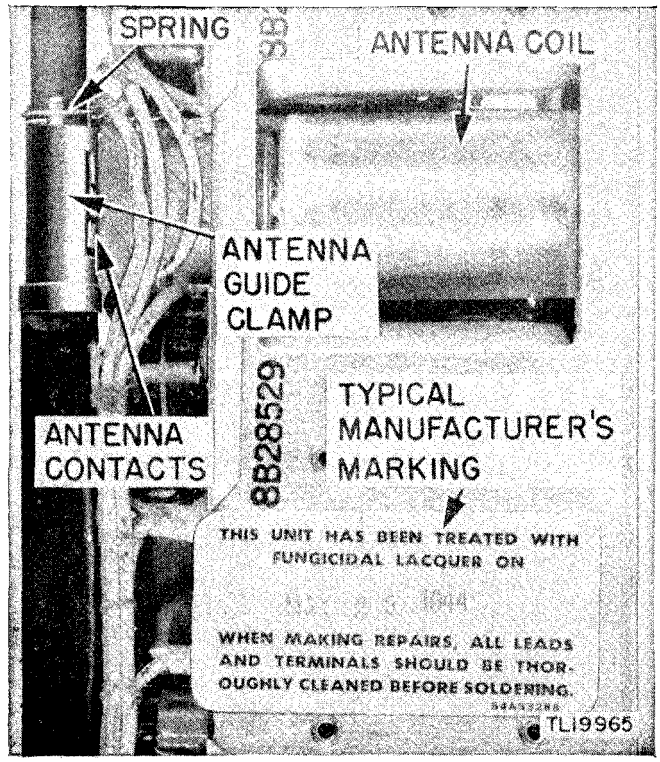

Figure 29. Typical manufacturer's MFP marking.

Section X. WATERPROOFING

45. General

Water pump grease No. 4 is used as a means of preventing moisture seepage around the antenna waterseal, at the earphone and microphone cap connections, and at the sealing rubber gaskets of the top and bottom covers of the set. It is used in extremely wet climates in addition to the moistureseals built into the set. (See par. 10.)

46. Procedure

a. Spread a small quantity of water pump grease No. 4 over the sealing gaskets of both bottom and top covers.

b. Close bottom cover and press it firmly in place while tightening the hinged thumbscrew. Be sure this screw is tight.

c. Insert a fiber washer under the screw that holds the top cover to the chassis. Turn the screw down tightly to hold the cover in place.

d. Remove the cover of the press-to-talk switch. Spread a thin coating of Permatex over the bottom surface (side which makes contact with the case) and replace the cover. Be sure the metal escutcheon plate is screwed down snugly.

e. Remove the caps from both the microphone and earphone housings. If earphone and microphone use paper diaphragms (Radio Sets SCR–536–A and SCR–536–B), squeeze a small quantity of household cement on the diaphragms of both pieces (dynamic type only) and spread out evenly with finger. Allow to dry for several minutes and repeat with a second coat. Allow the cement to dry for ½ hour before replacing the protective cap covers. This treatment is not required on units which use bakelite diaphragms.

f. Remove the grommet from the ceramic antenna insulator (on models of this construction), fill

the inside of the grommet with water pump grease No. 4, and replace on the insulator.

47. Materials Required

The following materials, furnished with Maintenance Equipment ME–36, are used to waterproof 50 Radio Sets SCR–536–(*) for 1 year:

Quantity	Name and description	Signal Corps stock No.
1 gross....	Washers, fiber, 5/16″ OD, 3/16″ ID, 1/16″ thick.	6L50523
8 ounces...	Permatex, aviation type.....	6G1514
1 tube.....	*Cement, household, 5¼ fluid oz (Duco).	6G199
2 pounds..	Grease, water pump, No. 4, U.S. Army Spec. 2–109.	6G617–1

* For Radio Sets SCR–536–A and –B only.

PART FOUR

AUXILIARY EQUIPMENT

Section XI. OPERATING ACCESSORIES

48. Battery BA–30 Filament Supply

a. Battery Adapter FT-501. In actual operation under tactical conditions the filament current A Battery BA–37 expends itself before the B Battery BA–38 becomes inoperative. To take advantage of the more readily available flashlight Battery BA–30 as an emergency filament supply for Radio Set SCR–536–(*), Battery Adapter FT–501 (fig. 30) has been designed to hold two Batteries BA–30 and just fill the space in the compartment intended to hold the normal filament Battery BA–37. When not issued as a part of Radio Set SCR–536–(*), requisition of Battery Adapter FT–501 may be made through normal signal supply channels (Signal Corps stock No. 2Z200–501). Two Batteries BA–30 do not provide as long-lived filament supply (15 hours) as the normal BA–37 (19 hours), and should not be used if Battery BA–37 is available. Before using the adapter, be sure the contacts are clean and bright to insure good electrical connections between the adapter and the batteries and the spring connectors on the housing of the set. Battery Adapter FT–501 is inserted with plus (+), or raised button, end of the assembly toward the bottom of the housing.

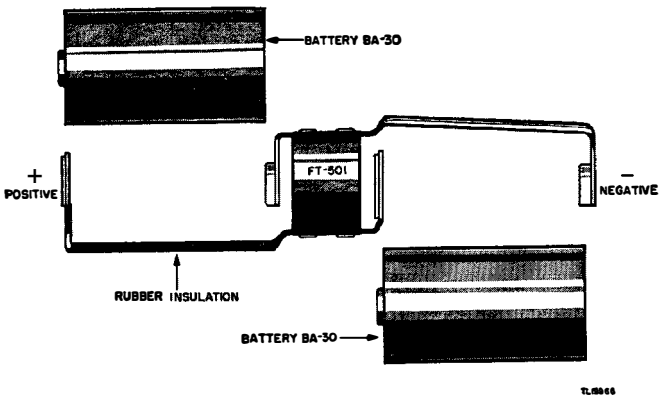

Figure 30. Battery Adapter FT–501, using two Batteries BA–30.

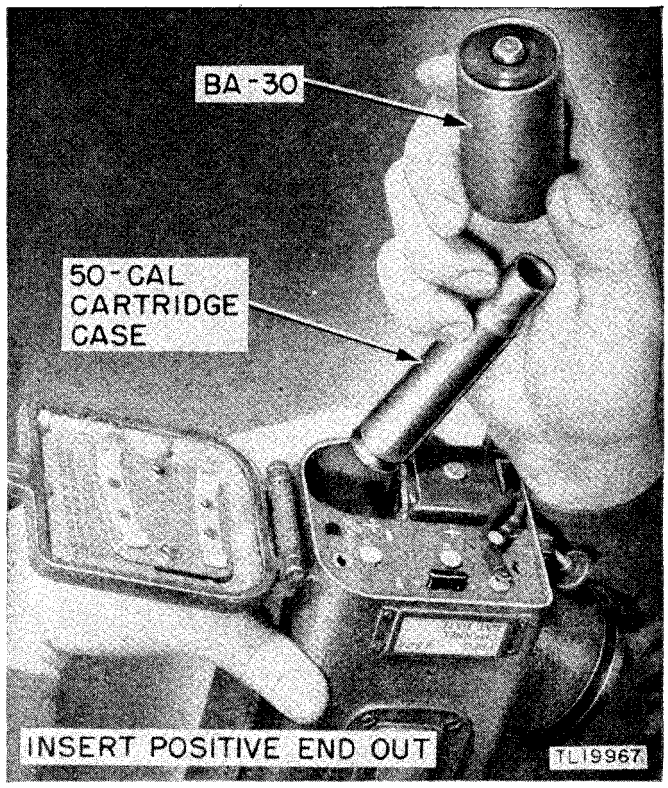

Figure 31. Battery BA–30 and 50-cal cartridge case.

Note. Do not use *two* Batteries BA–30 without Battery Adapter FT–501. Failure to observe this caution will burn out the tube filaments.

b. Expedient Battery Adapter. As an expedient filament supply, a single Battery BA–30, and an expended 50-cal (caliber) cartridge case may be used. (See fig. 31.) This makeshift arrangement will fill the compartment provided for Battery BA–37. Battery life will be considerably reduced (5 hours), therefore suitable provisions must be made to replace the battery promptly as often as necessary to guarantee uninterrupted communication. Both ends of the cartridge case must be kept clean and bright to insure effective electrical contact. Insert

the expended 50-cal cartridge case, butt first, in the Battery BA–37 compartment followed by a Battery BA–30 with the plus (+), or raised button, end outward.

49. Inclement Weather Protection

a. Microphone Cover M–367. When the set is used in freezing weather, moisture from the breath condenses and freezes, plugging the holes in the microphone cap and making transmission impossible. This freezing condition can be prevented by use of Microphone Cover M–367 which also serves as protection against sand or dust. (See fig. 32.) The cover is made of a light, water-repellent fabric with a drawstring or elastic band for holding it tightly over the microphone on the set. The cover is not waterproof and will not protect against immersion in water or against long exposure to tropical humidity. Microphone Cover M–367 is used whenever the radio set is operated under freezing, dusty, or sandy conditions. Current issues of Radio Set SCR–536–(*) are supplied with the cover as a component part. The cover also may be requisitioned through normal supply channels; the stock numbers are listed below.

Item	Signal Corps stock No.
Microphone Cover M–367 (with draw string)...	2B1567
Microphone Cover M–367 (with elastic band)..	2B1617/128

b. Protective Covers. (1) The protective small arms cover, as issued by the Quartermaster Corps for protecting rifles and carbines from water, may

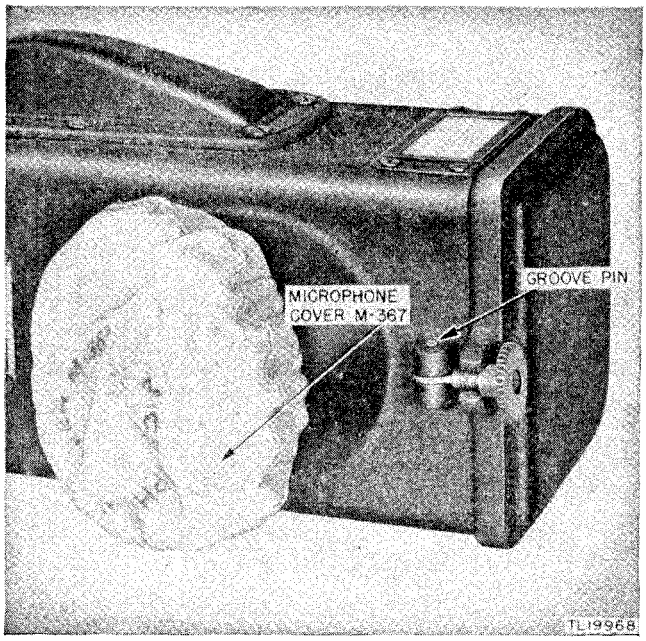

Figure 32. Microphone Cover M–367.

Figure 33. Protective cover for operation in heavy rain.

be used to protect the Radio Set SCR–536–(*) when operating in the rain. The open end is rolled down tightly over the top of the housing when the set is not in use. During operation, the small arms cover is fully extended to protect as much of the antenna as possible and the set is operated from outside the protective cover. (See fig. 33.) It may be necessary to speak louder and listen more intently because of the muffling effect of the protective cover, but this is a minor inconvenience compared to the additional protection afforded by the cover. (See sec. X.)

(2) Two different waterproof bags, both of

which will entirely cover the antenna when extended, are available through normal Quartermaster Corps supply channels. The first *special purpose* cover is a better fit for the radio set, since it is a little smaller than the *rifle or carbine* cover, but both types are satisfactory. They may be requisitioned through normal supply channels; stock numbers are listed below.

Name and description	Quartermaster Corps stock No.
Cover, waterproof, special purpose.....	24–C–7300
Cover, waterproof, rifle or carbine.....	74–C310–41

50. Expedient Antenna

a. Construction. If the antenna rod is broken or damaged or if inappropriate background renders satisfactory concealment of the antenna impractical (par. 22), a wire antenna may be laid on the ground. Use a length of insulated wire approximately 100 feet long and lay it on the ground pointing directly at the station with which communication is required. Bare several inches of the end of the wire near the operator and wrap it tightly around the telescopic rod antenna as near to the insulator as possible. Apply rubber or friction tape, if available. Be sure that the antenna, even if serviceable, remains completely telescoped for purposes of concealment, except for about 1 inch of the bottom section required to actuate the on-off switch.

b. Directional Pattern. This wire antenna has a pronounced directional pattern and communication will be unsatisfactory or impossible with stations more than 30° on either side of the antenna. If local conditions are such that it is impossible to lay the wire to point directly at the other station, it may be laid, with a slight reduction in signal strength, pointing directly away from the second station. Any reduction in the length of the antenna wire is not recommended as the signal strength falls off rapidly as the length is reduced. A longer length may be used, but no substantial increase in signal strength will be obtained.

51. Equipment for Use With External Jacks

When using the accessories in conjunction with the jacks on Radio Set SCR–536–F, set the switch inside the baseplate at the EXTERNAL position.

a. Headset HS–30–( ). The headset may be worn under a helmet. (See figs. 9 and 34.) The earpieces fit into the ear cavities.

b. Microphone T–30. Microphone T–30 consists of two carbon-button microphone elements housed in plastic cases and held in a rubber neckpiece by snap rings. The microphone is actuated by the mechanical vibrations of speech as transmitted through the throat of the operator. (See fig. 9.)

c. Microphone T–45. Microphone T–45 consists of a small carbon-button microphone with antinoise

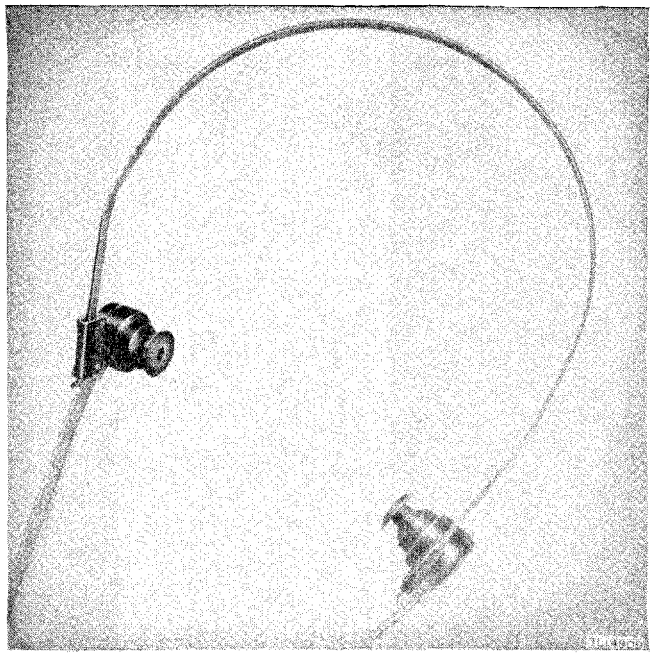

Figure 34. Headset HS–30–( ).

characteristics. It is worn strapped to the head in a position directly over the upper lip. (See fig. 35.) It can be worn under the gas mask. The primary

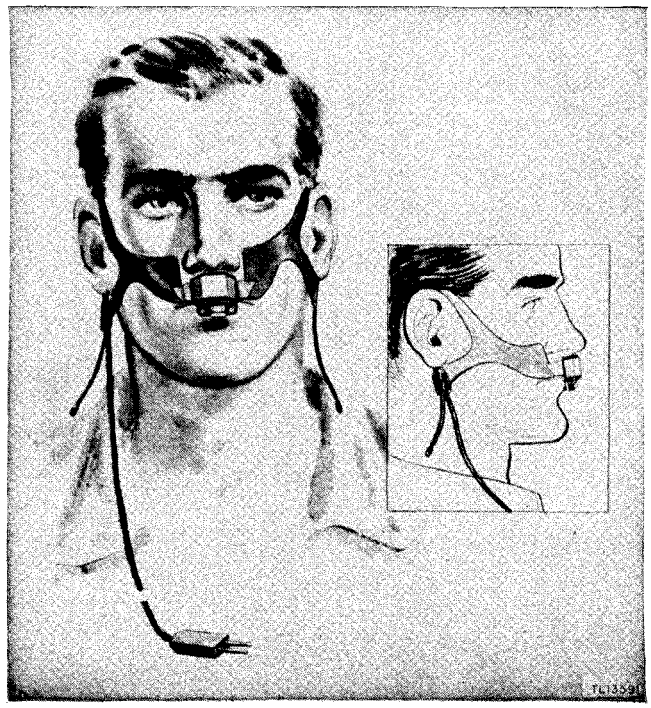

Figure 35. Microphone T–45.

advantage of this microphone for use with Radio Set SCR–536–F is its value under extremely noisy conditions.

52. Maintenance Equipment ME–36

Maintenance Equipment ME–36 is furnished for organizational maintenance of Radio Set SCR–536–(*) on a T/O and E basis. For descriptions and quantities of items included see ASF Signal Supply Catalog, SIG 6 ME–36, Sets of Equipment for Maintenance Equipment ME–36 (when published).

Section XII. HOMING MODIFICATION KIT MC–619

53. General

Homing Modification Kit MC–619 (fig. 36) is a directional antenna attachment designed to be used with Radio Set SCR–536–(*). A loop antenna is provided for use in place of the nondirectional telescopic rod antenna with which the radio set is

Figure 36. Homing Modification Kit MC–619 attached to Radio Receiver and Transmitter BC–611–(*).

equipped. The loop, Antenna AN–190–( ), when properly connected to the radio set, comprises an effective homing device. Homing is the act of proceeding toward a fixed point, or station, which discloses its identity by means of a radio signal. The direction of this signal at some remote point can be determined and followed to its source. The purpose of this equipment is to make it possible for the radio operator to find the approximate direction of a transmitter tuned to his frequency and to proceed toward it. Homing Modification Kit MC–619 may be attached or removed from Radio Set SCR–536–(*), as authorized.

54. Components

Homing Modification Kit MC–619 consists of a multiturn loop permanently fastened to a collapsible wooden frame, a transmission line permanently attached to the loop at one end and fitted with a connector at the other, Coupling Unit BC–1387 with means for attaching to the top of Radio Receiver and Transmitter BC–611–(*), and accessories. The following table lists the components of Homing Modification Kit MC–619:

Signal Corps stock No.	Quantity	Name and description
2Z5725–619	1	Homing Modification Kit MC–619: Kit for use with Radio Set SCR–536–(*), consisting of one each of the following items:
		Antenna AN–190–( ): folding loop, (collapsible).
		Coupling Unit BC–1387.
		Case CS–156–( ): for carrying Radio Set SCR–536–( ) and component for Modification Kit MC–619, less Antenna AN–190–( ).
		Case CS–157–( ): for carrying Antenna AN–190–( ).
		Bottom cover plate (modified).
		Headset HS–30–( ).
		Cord CD–605.

a. Antenna AN–190–( ). The loop (fig. 37) consists of five turns of insulated wire mounted on four radial struts hinged at the center. The handle of the loop is an extension of the bottom strut, and contains a trimmer capacitor for tuning the loop and a sense button mounted on the panel front directly above the handle. A card, similar to that on the radio set, carries the serial number of the radio set and the frequency to which both are tuned.

b. Transmission Line. A 38-inch transmission line extends through the bottom of the loop handle and, at its end, has a three-conductor receptacle which terminates the two leads from the loop antenna plus an integral cable shield.

c. Coupling Unit BC–1387. The coupling unit (fig. 38) is housed in a steel can. The container has a mounting flange extending from its base plate which permits installation over the threaded antenna insulator base and the antenna cap mounting stud. The coupling unit contains an r-f coupling transformer and a variable capacitor for tuning the transformer. A short lead, extending through the front panel of the coupling unit and fitted with a clip, connects to the bottom section of the telescopic rod antenna of the radio set. A plug is mounted on the front panel and engages the connector on the transmission line.

d. Accessories. (1) Case CS–156–( ) provides carrying space for the radio set and Case CS–157–( ) provides carrying space for the kit components. The bags are fitted with suitable straps to permit slinging over the shoulder or under the arm. During homing operations the radio set may be carried in this bag.

(2) A bottom plate for Radio Receiver and Transmitter BC–611–(*) containing a jack for using an external headset is provided for installation on the chassis housing.

(*a*) The jack plate (fig. 39) is shipped with Homing Modification Kit MC–619; its installation is described in MWO SIG 11–235–5.

(*b*) Late models of Radio Receiver and Transmitter BC–611–F are equipped with provision for connection of the external headset and microphone. The plate need not be installed on these models.

(3) Headset HS–30–( ) with Cord CD–605 (containing an 8,000-ohm coupling transformer) is provided for use in conjunction with the external-jack bottom plate to eliminate outside noise when obtaining a bearing and to prevent the received signal from being heard by anyone other than the operator.

55. Installation

The jack plate is mounted by authorized maintenance personnel as described in MWO SIG 11–235–5, and is *not* to be installed by the radio operator.

a. Remove the collapsible loop and coupling unit from the carrying bag.

b. Check the card on loop handle with serial number and preset frequency on radio set.

c. Unscrew the antenna cap of the radio set and remove the slotted machine screw in the center of

the top cover plate. Place the coupling unit over the antenna insulator and threaded stud. Replace the threaded machine screw through the hole provided in the coupling unit flange. Tighten securely to insure a good ground for the coupling unit. Screw the antenna cap over the threaded boss which now extends through a hole in the coupling unit mounting flange.

d. Raise the bottom section of the antenna until the set clicks on, keeping all the upper antenna sections collapsed. Snap the antenna clip at the end of the coupling lead to the bottom antenna section. Reduce the bottom section extension so that it just matches the width of the connecting clip. This is important since the loop antenna is adjusted for this amount of extension and any appreciable difference will seriously detune the receiver and reduce its sensitivity.

e. Erect the loop antenna by opening the four arms as far as they will go. Then hold the handle

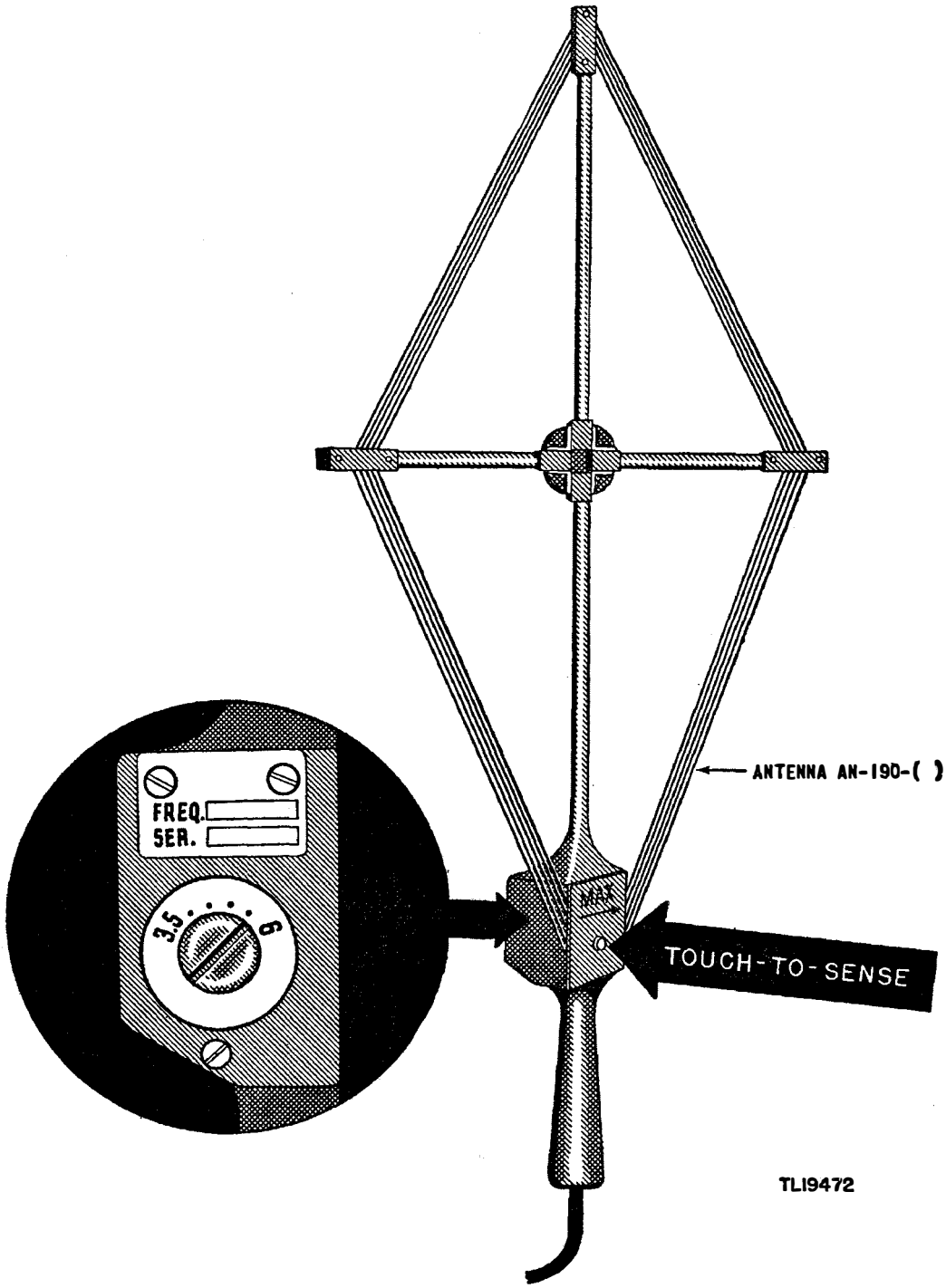

Figure 37. Loop antenna, showing the location of the sense button, indicating arrows, tuning control serial number, and frequency record card.

against the belt or waist (fig. 40) and grasp the horizontal struts so that the thumbs press down on the top strut while the hands press open the horizontal struts. Press equally on all four struts until the frame snaps into the fully opened position. The tension of the wires will hold the frame open.

f. Connect the receptacle at the end of the transmission line to the plug on the coupling unit.

g. Plug the headset into external jack on bottom cover.

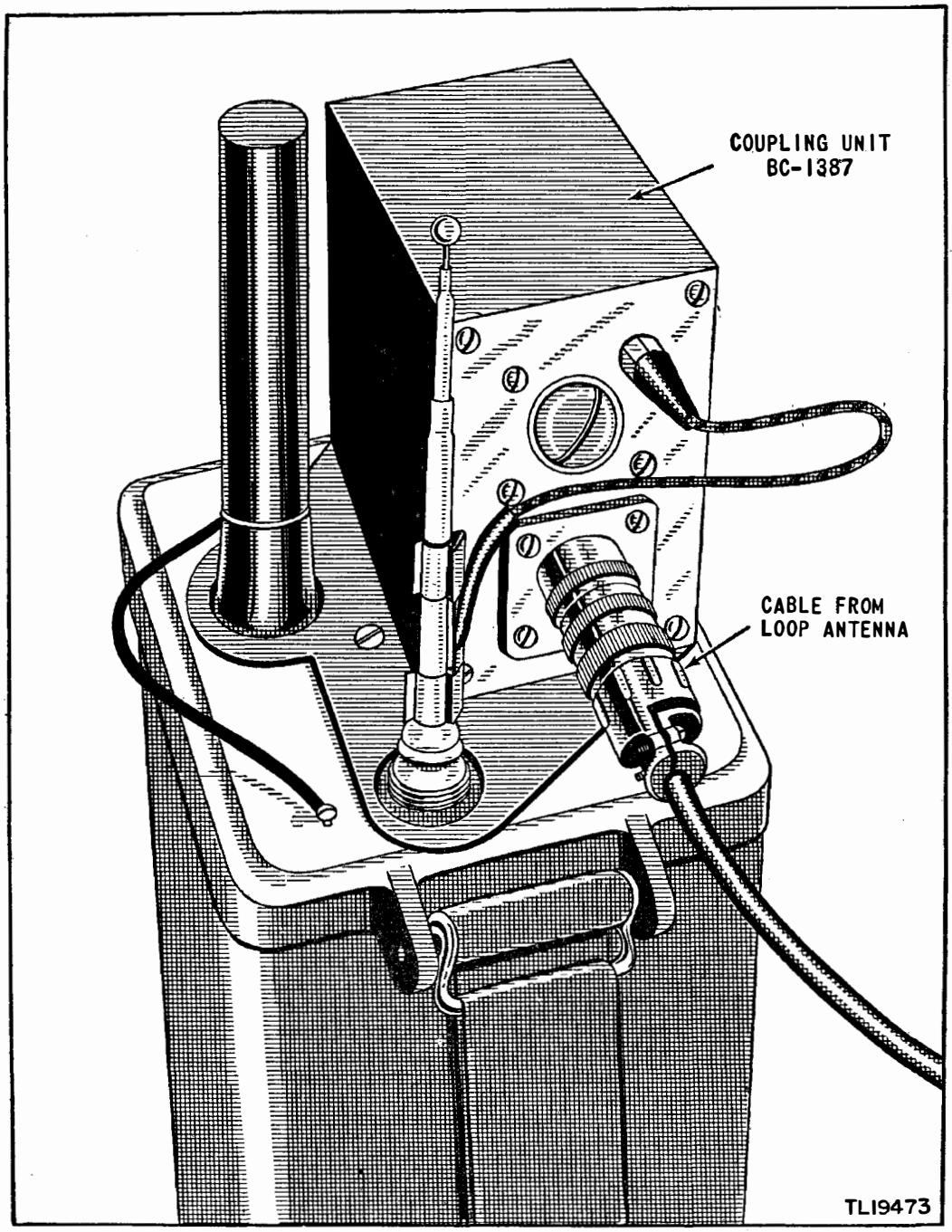

Figure 38. Details for mounting coupling unit on Radio Receiver and Transmitter BC-611-(*).

56. Operation

a. Null Location. Hold the loop antenna vertical and the handle approximately at eye level. Rotate the antenna around a vertical axis by means of wrist motion. In the presence of a signal to which the loop antenna and receiver have been pretuned, two points will be found at which the output in the headset falls off or disappears altogether. These points are called nulls. They occur when the broadside of the loop exactly faces the source of the sig-

nal. Thus two nulls occur one-half revolution (180°) apart. When turned to a null, a line drawn through the center of the loop perpendicular to the broadside will be in line with the transmitting source.

b. Sensing. Since there will be two null positions (fig. 41) it is evident that the transmitter may be either in front of or behind the loop. To determine from which side the signal is arriving (the sense of the bearing), touch the thumb to the sense button on the front panel of the loop handle and rotate the loop a quarter turn from the null, first in one direction and then in the other. In one of the two positions the signal is louder than in the other. Turn a quarter turn from the initial null to the louder position. The arrows on the loop handle now point toward the transmitter. Remove thumb from sense button and use the original null for direction finding because it gives a sharper and more accurate bearing indication. It the presence of a strong signal the null will be quite narrow, and rotation of a few degrees will result in sharp signal variations in the headset. On a weaker signal, the width of the null may increase to 30° or 40°. The center of this null arc, or area, is the correct bearing. This equipment can be used effectively up to 1 or 2 miles, depending on the strength of the received signal.

Caution: The sense button should be touched only when sensing. As soon as sense has been determined, remove the thumb from the sense button and proceed by keeping the loop in the null position.

c. Homing. To *home* on a signal, take a bearing by finding a null, determine the sense, and proceed in the direction indicated by the arrows inscribed on the loop. Once the proper sense has been determined, turn the loop back to the broadside position and again obtain the null. If the null is particularly broad, rotate the loop back and forth a few times. The hand will divide the null almost automatically and find the approximate center. Proceed along a line through the center of this null until the home station is reached. As the transmitter is approached, successive bearings can be taken with increased accuracy due to greater signal strength and consequent reduction in the width of the null arc.

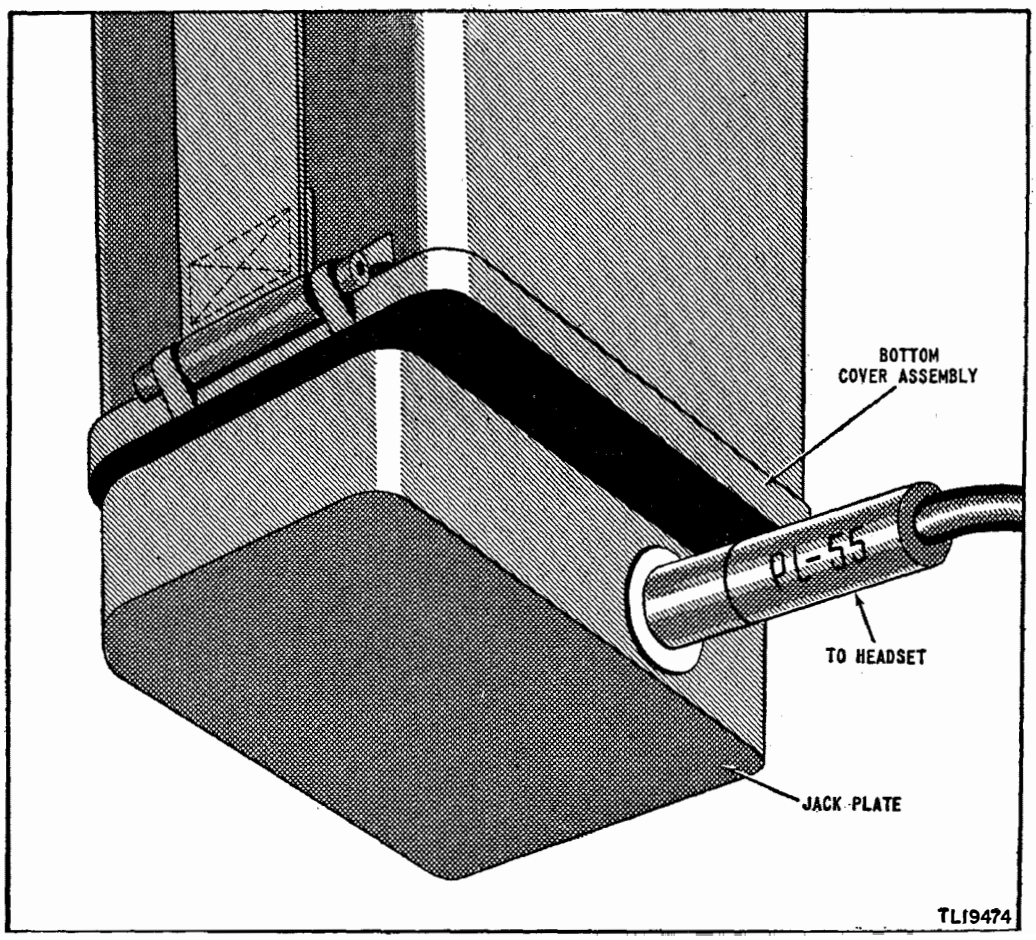

Figure 39. Jack plate mounted on bottom cover of radio set housing.

d. Blocking. Because of the action of the auto-

Figure 40. Method of holding loop to snap it open.

matic volume control incorporated in the receiving circuit, very strong signals may have a tendency to obscure the null. In general, signals of such strength will be found principally in the immediate vicinity of the transmitter. However, if the transmitter is concealed and a very strong signal tends to obscure the null points, touch the stub of the telescopic rod antenna on the radio set. This will reduce the sensitivity of the receiver and will be effective in making the null clear again.

e. Operating Hints. (1) Do not tamper with adjustments. The components of Homing Modification Kit MC–619, like Radio Receiver and Transmitter BC–611–(*), are preset for a single frequency. Only qualified maintenance personnel make adjustments.

(2) Use loop only with the radio set for which it has been adjusted. Because of minor differences in radio sets pretuned to the same frequency, the loop antenna gives best results with the radio set for which it has been pretuned and whose serial number appears on the loop.

(3) Be sure to extend the bottom telescopic rod antenna section to the *exact* height of the lead clip from the coupling unit. This is part of the tuning operation and must be accurate.

(4) Always hold the loop in a vertical position as high as possible with comfort. Keep the loop clear of obstructions such as trees, shrubbery, walls, and vehicles.

(5) Avoid taking bearings near natural or man-made obstacles. Locations under power or tele-

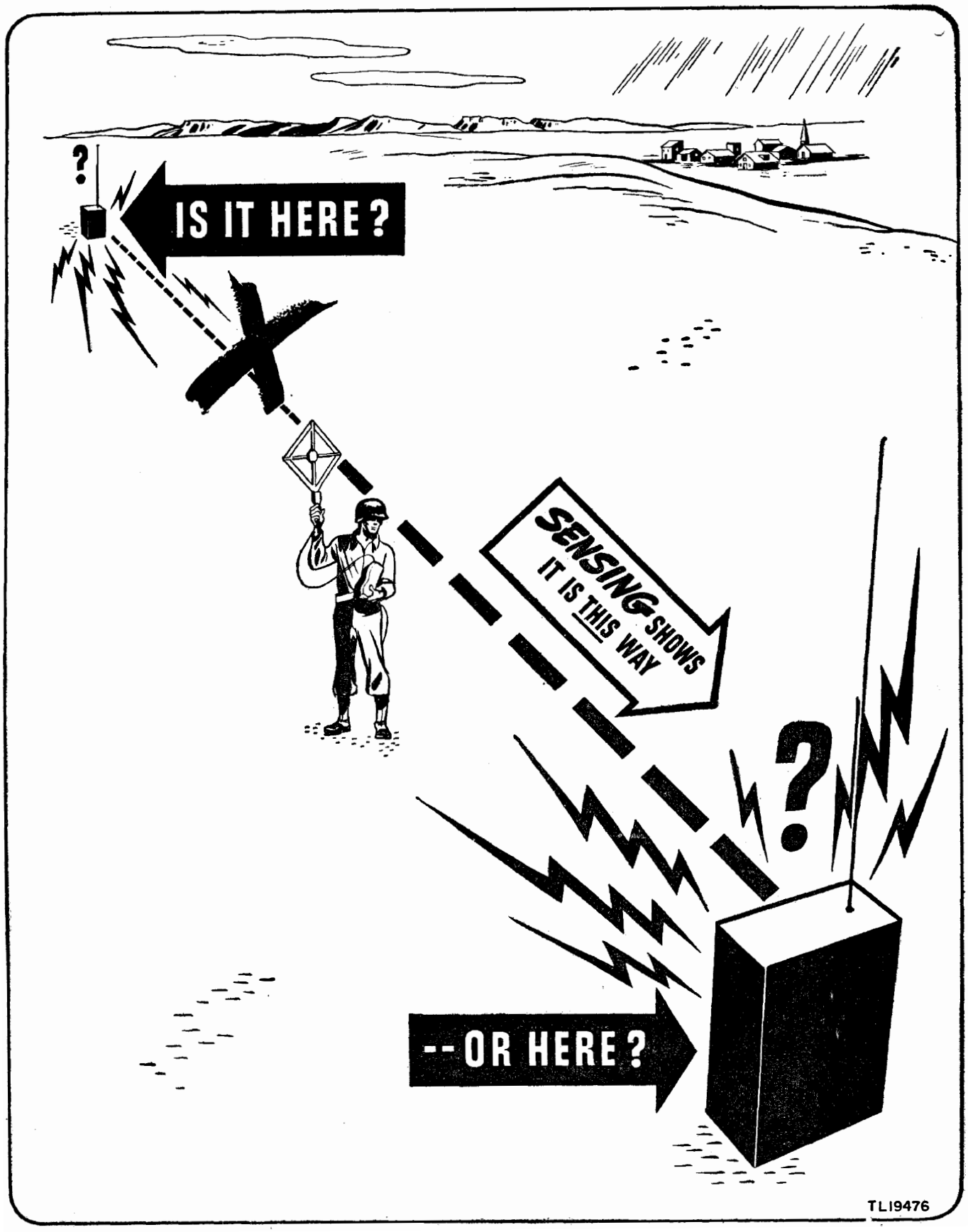

Figure 41. Effect of sense determination on two initial nulls.

phone lines, or near fences, railroad tracks, abrupt cliffs, or buildings, distort the wave path and usually cause false bearings.

(6) Do not try to modify the components of the kit by lengthening or shortening the transmission line or by redesigning the loop. The loop, transmission line, and coupling unit comprising Homing Modification Kit MC–619 are designed to work together. Any expedient adjustments may disable it completely.

(7) Turn off the receiver when not taking a bearing. To conserve batteries when not in use, turn off the radio set by completley collapsing the bottom section of the telescopic rod antenna.

the correct direction of the desired transmitter and the exact reverse of this direction, a vertical antenna may be used to add or subtract signal voltages with different phase relationships to the two sides of the loop. With Homing Modification Kit MC–619, the operator's body serves as the vertical sense antenna when contact is made by the operator's thumb with the sense button on the antenna frame. This results in a heart-shaped cardioid field-strength pattern with a single broad null and a single broad maximum (fig. 42) which is suitable for solving the double null obtained with the loop, but too inaccurate for obtaining a true bearing.

c. Homing Modification Kit MC–619. The

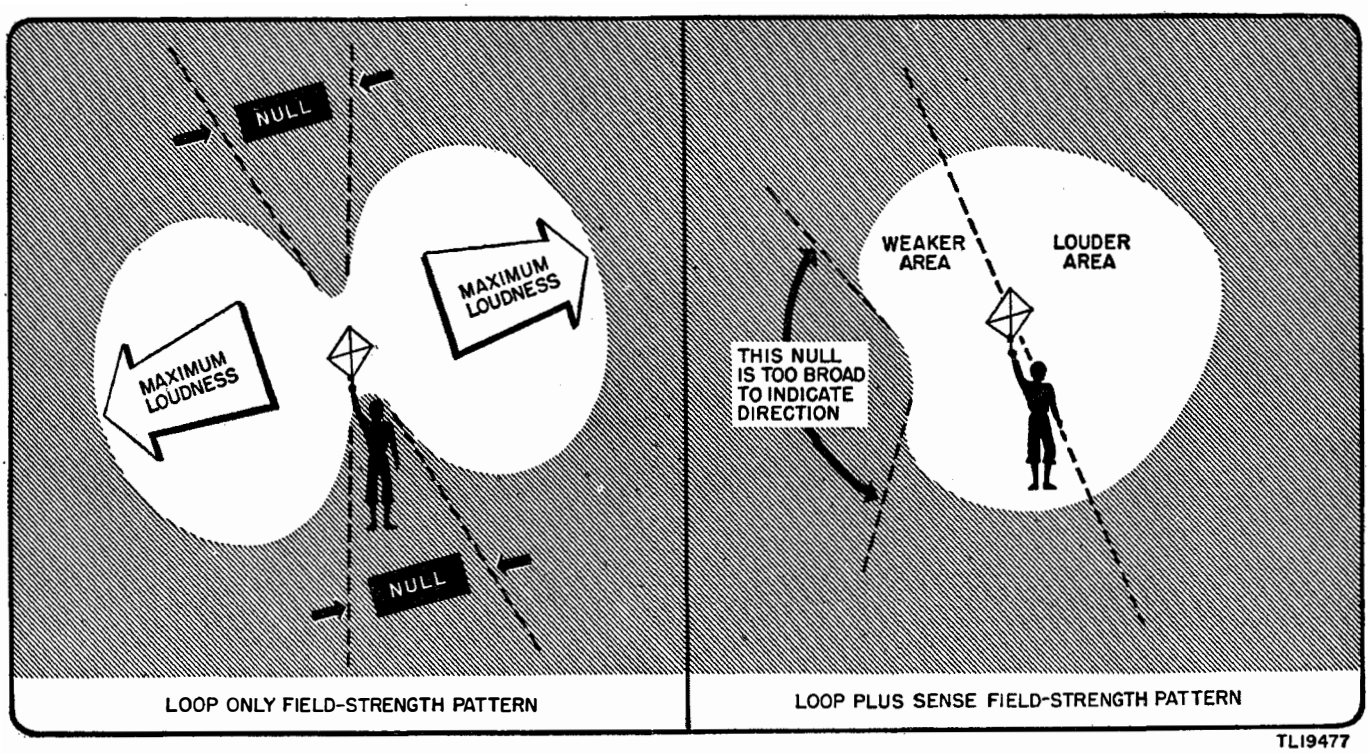

Figure 42. Directional antenna, field strength patterns.

57. Theory of Equipment

a. Loop Antennas. The directional properties of a loop antenna are such that maximum pick-up is obtained when one of the edges is pointed toward the transmitter, and minimum when the flat loop is broadside to the transmitter. (See fig. 42.) This results in a figure-8 field-strength pattern. Null points of minimum or no signal, rather than points of peak or maximum signal, are used to indicate direction, because the rate of change of signal intensity is greater near the null than at the points of maximum pick-up. Thus the center of a null is more easily recognized than the exact center of a loud signal.

b. Sense Antennas. To differentiate between

loop antenna is so wound and the sense voltage is introduced in such a manner that when the loop is rotated 90° away from a null and the signal increases the arrows on the loop indicate the true direction to the transmitter. The antenna consists of a four-turn loop, approximately 15 inches on a side, across which is connected an air-dielectric variable capacitor C1. (See fig. 43.) A fifth turn serves as an inductance coupling between the loop antenna and the transmission line to the radio receiver. This fifth turn connects across the terminals of a two-conductor shielded cable which constitutes a balanced line to the coupling unit mounted on the radio set.

d. Coupling Unit. The coupling unit consists of an autotransformer with a center-tapped primary

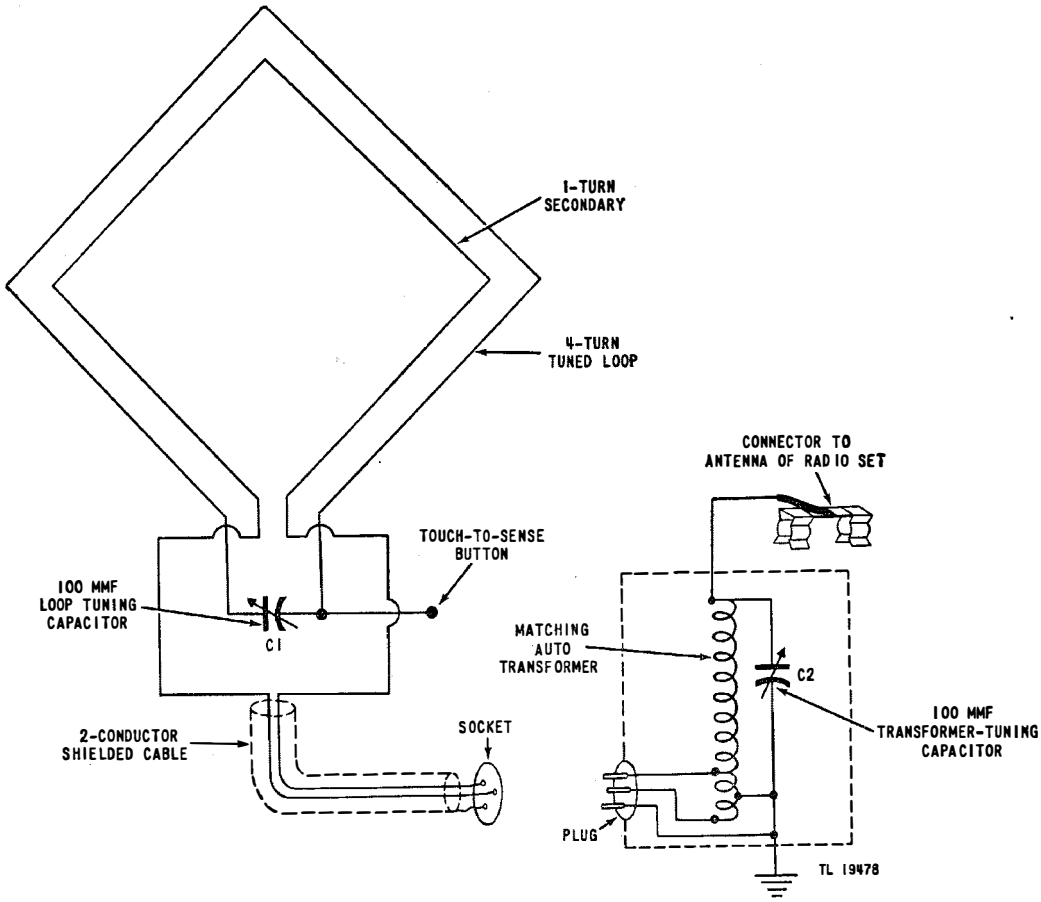

Figure 43. Homing Modification Kit MC–619, schematic diagram.

and a tuned secondary. Tuning capacitor C2 is an air-dielectric variable capacitor; it tunes both the transformer and the input circuit to the radio set. The input circuit is detuned when the telescopic rod antenna is not fully extended.

58. Mounting Bottom Plate

When authorized, Radio Set SCR–536–(*) may be fitted with a bottom cover plate for use with Homing Modification Kit MC–619. (See MWO SIG 11-235–5.) This modification is unnecessary on later models of Radio Set SCR–536–F, which have jacks for external accessories.

59. Pretuning

The pretuning procedure described assumes that Radio Receiver and Transmitter BC–611–(*) has been properly aligned for the particular frequency on which it is to be used.

a. Prepare the equipment for operation as described in paragraph 54. Make sure that the telescopic rod antenna is collapsed except for that portion of the bottom section equal to the width of the antenna clip of the coupling unit.

b. Unscrew the trimmer plugs on the loop and coupling unit.

c. Rotate loop trimmer C1 so that the red dot on the screw driver slot points to the frequency (marked on the loop panel) nearest the one to be used.

Note. The frequency to which the radio set is tuned is indicated in kc (kilocycles) (3,500 to 6,000 kc) on the radio data card. The frequency to which the loop trimmer must be set is indicated in mc (megacycles) (3.5 to 6.0 mc) on the calibrating dial. A dot indicates each 0.5 mc.

d. Using another radio set tuned to the same frequency; a noisy rotating commutator from an electric motor, generator, or dynamotor; a fluorescent light fixture; or an unsuppressed vehicle engine as a source of an r-f signal; rotate coupling unit trimmer C2 for maximum noise level.

e. Readjust loop trimmer C1 and coupling-unit trimmer C2 for more accurate adjustment.

f. Replace trimmer plugs. The unit is now ready for operation with the particular Radio Set SCR–536–(*) for which it was adjusted. If the loop system is to be used with another radio set, a slight readjustment of trimmer C2 in the coupling unit is necessary.

g. Record the frequency and serial number of Radio Receiver and Transmitter BC–611–(*) on the card on the loop antenna handle.

60. Moistureproofing and Fungiproofing

a. PREPARATION. Make all repairs and adjustments necessary for proper operation of the equipment.

b. DISASSEMBLY. (1) Erect the loop antenna by opening the four arms until the frame snaps into full open position.

(2) Remove the three screws that retain the bakelite panel on the side of the loop handle.

(3) Pull the panel out carefully as far as the wires attached to the tuning capacitor will allow. (See fig. 44.)

Caution: Handle the trimmer capacitor carefully, as the plates will short-circuit if bent.

(4) Disconnect the tranmission line from the coupling unit.

(5) Remove the four screws from the corners of the coupling unit panel. (See fig. 45.)

(6) Pull the panel forward. All of the components are mounted on the panel. The container does not require any treatment.

c. CLEANING. Clean all dirt, dust, rust, and fungus from the equipment. Remove all oil and grease.

d. MASKING. Completely cover the following components with masking tape:

(1) Center piece of the loop antenna. (See fig. 46.)

(2) Sense button. (See fig. 46.)

(3) Loop trimmer capacitor. (See fig. 44.)

(4) Tuning capacitor in the coupling unit. (See fig. 45.)

e. DRYING. Bake the equipment in accordance with the instructions given in paragraph 43*e*.

f. VARNISHING (par. 43*f*). (1) Apply varnish by brush to the wires and insulators on the loop trimmer capacitor, and to the wires, insulators, and transformer of the coupling unit.

Caution: Do not allow the varnish to drip or run on to the capacitor plates or in the screw holes.

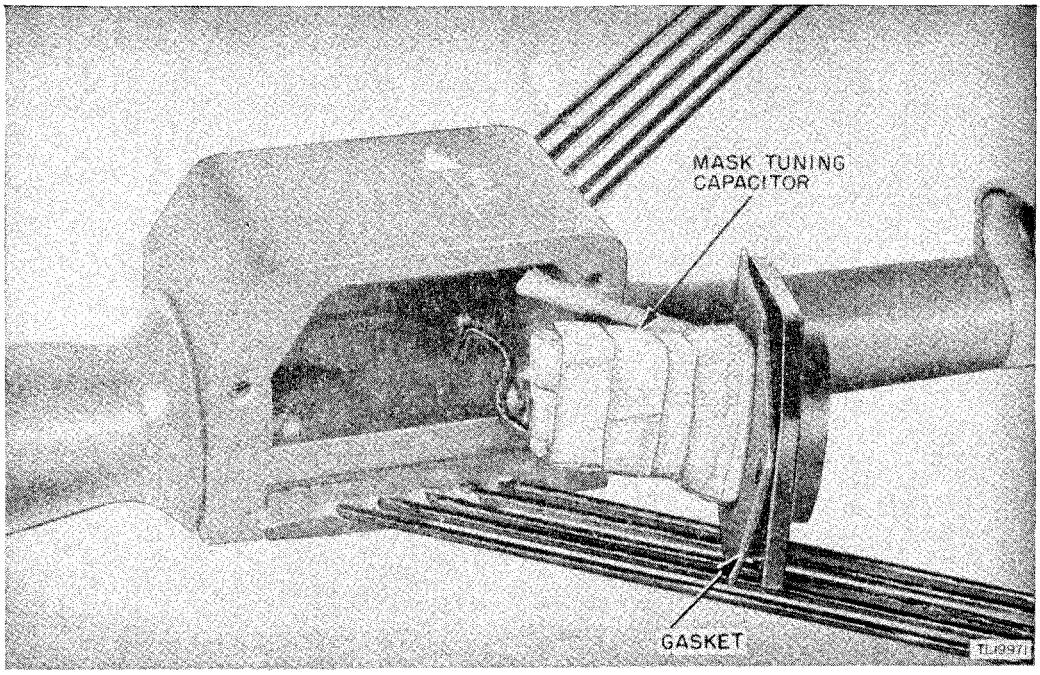

Figure 44. Tuning capacitor, masking.

(2) Spray varnish on the five loop wires.

(3) Bake the equipment for 10 minutes.

(4) Repeat steps (1), (2), and (3) above, for three coats of varnish.

g. REASSEMBLY AND TEST. (1) After the third baking operation, remove all masking tape and reassemble the equipment by following the disassembly instructions in reverse order.

(2) Check the operation of the equipment. If possible, allow 2 or 3 days for the equipment to become stabilized after the above treatment before making final adjustment.

h. MARKING. Mark the letters MFP and the date of treatment on the top of the coupling unit and just below the strap on the antenna handle.

Example: MFP—1 Mar 45.

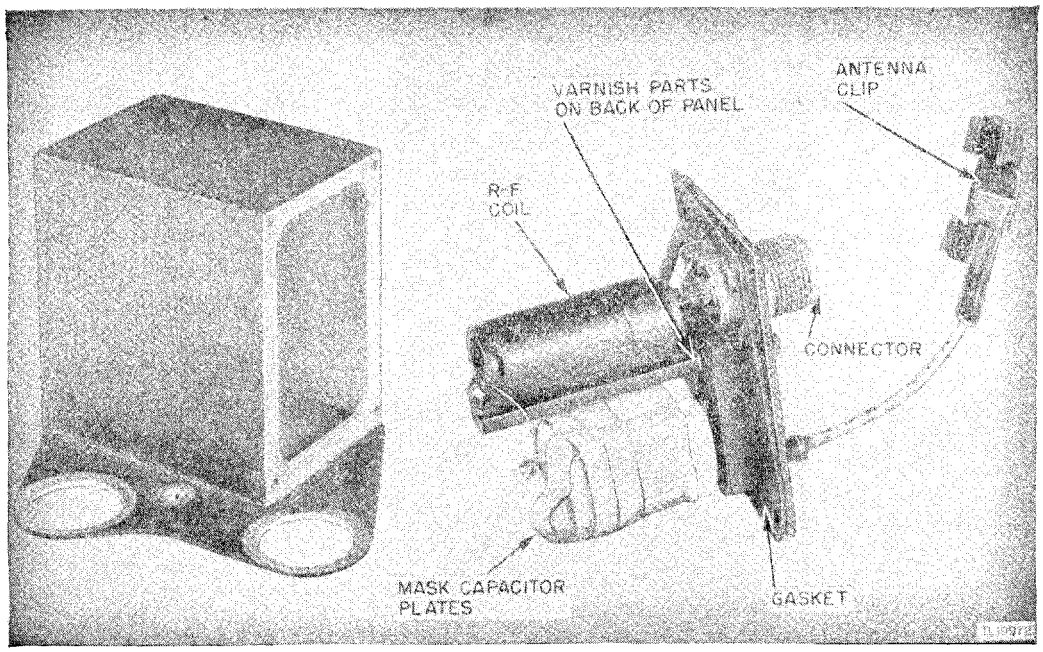

Figure 45. Coupling unit, masking.

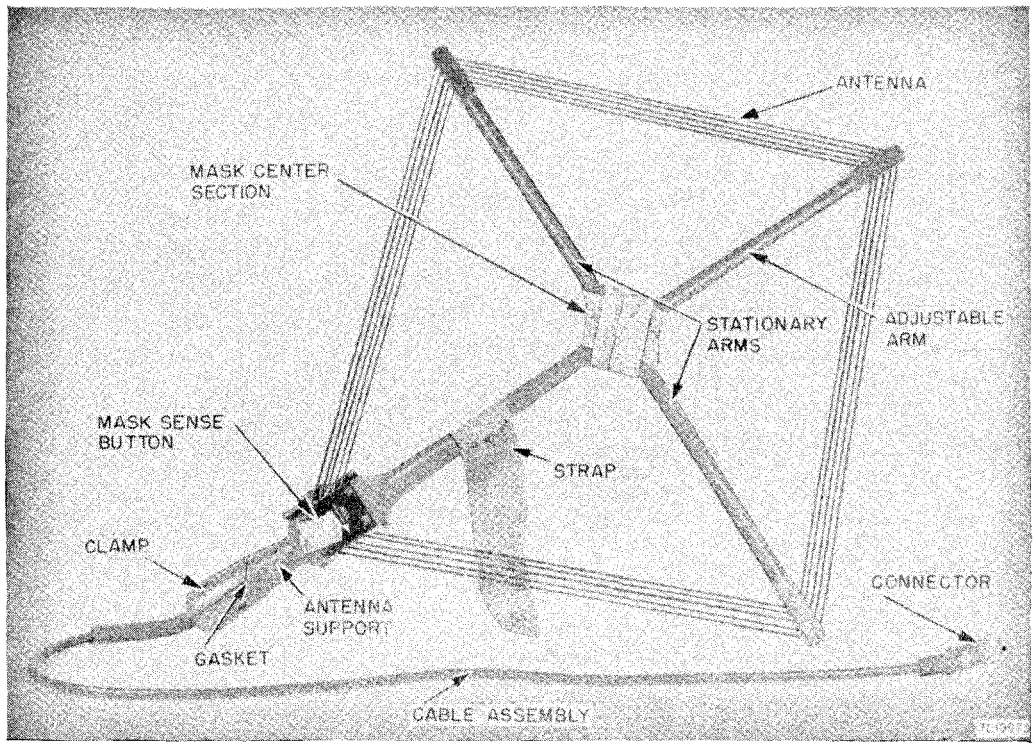

Figure 46. Loop antenna, masking.

61. Moistureproofing and Fungiproofing After Repairs

If, during repair, the coating of protective varnish has been punctured or broken, and if complete treatment is not needed to reseal the equipment, apply a brush coat to the affected part. Be sure the break is completely sealed.

Section XIII. FREQUENCY CONVERSION KITS

62. Frequency Conversion Kit MC–534

a. General. Frequency Conversion Kit MC–534 consists of Chest CH–233 which contains 400 Crystal Holders FT–243, 72 ANTENNA coils L1, and 60 TANK COILS, L2. (See fig. 47.) These components provide the appropriate ANTENNA coil, TANK COIL, receiver crystal, and transmitter crystal for operation of Radio Set SCR–536–(*) on any of 50 different frequencies.

b. Components.

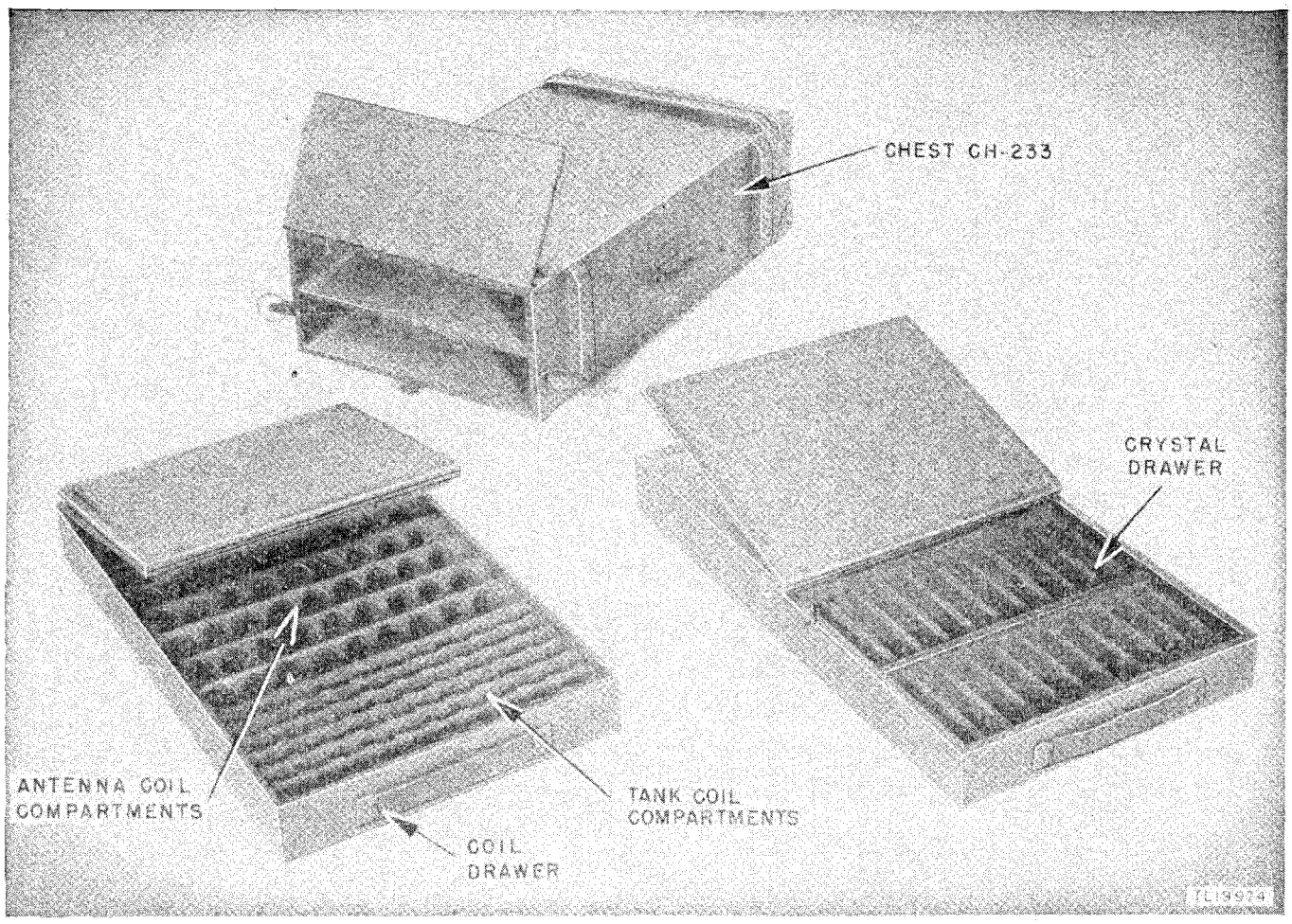

Figure 47. Chest CH–233.

Quantity	Item
1	Chest CH–233, for storing and transporting 400 crystals in Crystal Holders FT–243, 72 ANTENNA coils, and 60 TANK COILS for Radio Set SCR–536–(*)
6	Coil C–358 (3,500–3,675 kc)
6	Coil C–359 (3,675–3,825 kc)
6	Coil C–360 (3,825–4,025 kc)
6	Coil C–361 (4,025–4,225 kc)
6	Coil C–362 (4,225–4,425 kc)
6	Coil C–363 (4,425–4,625 kc)

Quantity	Item
6	Coil C–364 (4,625–4,825 kc)
6	Coil C–365 (4,825–5,075 kc)
6	Coil C–366 (5,075–5,300 kc)
6	Coil C–367 (5,300–5,500 kc)
6	Coil C–368 (5,500–5,775 kc)
6	Coil C–369 (5,775–6,000 kc)
10	Coil C–370 (3,500–3,825 kc)
10	Coil C–371 (3,825–4,225 kc)
10	Coil C–372 (4,225–4,625 kc)
10	Coil C–375 (4,625–5,075 kc)

Quantity	Item
10	Coil C–374 (5,075–5,500 kc)
10	Coil C–375 (5,500–6,000 kc)
4	Crystal Holder FT–243 with crystal, for receiver (3,955 kc)
4	Crystal Holder FT–243 with crystal, for receiver (3,995 kc)
4	Crystal Holder FT–243 with crystal, for receiver (4,045 kc)
4	Crystal Holder FT–243 with crystal, for receiver (4,095 kc)
4	Crystal Holder FT–243 with crystal, for receiver (4,135 kc)
4	Crystal Holder FT–243 with crystal, for receiver (4,175 kc)
4	Crystal Holder FT–243 with crystal, for receiver (4,215 kc)
4	Crystal Holder FT–243 with crystal, for receiver (4,255 kc)
4	Crystal Holder FT–243 with crystal. for receiver (4,295 kc)
4	Crystal Holder FT–243 with crystal, for receiver (4,340 kc)
4	Crystal Holder FT-243 with crystal, for receiver (4,395 kc)
4	Crystal Holder FT–243 with crystal, for receiver (4,445 kc)
4	Crystal Holder FT–243 with crystal, for receiver (4,490 kc)
4	Crystal Holder FT–243 with crystal, for receiver (4,620 kc)
4	Crystal Holder FT–243 with crystal, for receiver (4,695 kc)
4	Crystal Holder FT–243 with crystal, for receiver (4,535 kc)
4	Crystal Holder FT–243 with crystal, for receiver (4,735 kc)
4	Crystal Holder FT–243 with crystal, for receiver (4,785 kc)
4	Crystal Holder FT–243 with crystal, for receiver (4,852.5 kc)
4	Crystal Holder FT–243 with crystal, for receiver (4.900 kc)
4	Crystal Holder FT–243 with crystal, for receiver (4,950 kc)
4	Crystal Holder FT–243 with crystal, for receiver (4,995 kc)
4	Crystal Holder FT–243 with crystal, for receiver (5,035 kc)
4	Crystal Holder FT–243 with crystal, for receiver (5,090 kc)
4	Crystal Holder FT–243 with crystal, for receiver (5,165 kc)
4	Crystal Holder FT–243 with crystal, for receiver (5,235 kc)
4	Crystal Holder FT–243 with crystal, for receiver (5,295 kc)
4	Crystal Holder FT–243 with crystal, for receiver (5,335 kc)
4	Crystal Holder FT–243 with crystal, for receiver (5,385 kc)
4	Crystal Holder FT–243 with crystal, for receiver (5,435 kc)
4	Crystal Holder FT–243 with crystal, for receiver (5,485 kc)
4	Crystal Holder FT–243 with crystal, for receiver (5,582.5 kc)
4	Crystal Holder FT–243 with crystal, for receiver (5,660 kc)
4	Crystal Holder FT–243 with crystal, for receiver (5,700 kc)
4	Crystal Holder FT–243 with crystal, for receiver (5,740 kc)
4	Crystal Holder FT–243 with crystal, for receiver (5,782.5 kc)
4	Crystal Holder FT–243 with crystal, for receiver (5,852.5 kc)
4	Crystal Holder FT–243 with crystal, for receiver (5,892.5 kc)

Quantity	Item
4	Crystal Holder FT–243 with crystal, for receiver (5,955 kc)
4	Crystal Holder FT–243 with crystal, for receiver (6,000 kc)
4	Crystal Holder FT–243 with crystal, for receiver (6,042.5 kc)
4	Crystal Holder FT–243 with crystal, for receiver (6,100 kc)
4	Crystal Holder FT–243 with crystal, for receiver (6,142.5 kc)
4	Crystal Holder FT–243 with crystal, for receiver (6,185 kc)
4	Crystal Holder FT–243 with crystal, for receiver (6,235 kc)
4	Crystal Holder FT–243 with crystal, for receiver (6,275 kc)
4	Crystal Holder FT–243 with crystal, for receiver (6,315 kc)
4	Crystal Holder FT–243 with crystal, for receiver (6,362.5 kc)
4	Crystal Holder FT–243 with crystal, for receiver (6,405 kc)
4	Crystal Holder FT–243 with crystal, for receiver (6,450 kc)
4	Crystal Holder FT–243 with crystal, for transmitter (3,500 kc)
4	Crystal Holder FT–243 with crystal, for transmitter (3,540 kc)
4	Crystal Holder FT–243 with crystal, for transmitter (3,590 kc)
4	Crystal Holder FT–243 with crystal, for transmitter (3,640 kc)
4	Crystal Holder FT–243 with crystal, for transmitter (3,680 kc)
4	Crystal Holder FT–243 with crystal, for transmitter (3,720 kc)
4	Crystal Holder FT–243 with crystal, for transmitter (3,760 kc)
4	Crystal Holder FT–243 with crystal, for transmitter (3,800 kc)
4	Crystal Holder FT–243 with crystal, for transmitter (3,840 kc)
4	Crystal Holder FT–243 with crystal, for transmitter (3,885 kc)
4	Crystal Holder FT–243 with crystal, for transmitter (3,940 kc)
4	Crystal Holder FT–243 with crystal, for transmitter (3,990 kc)
4	Crystal Holder FT–243 with crystal, for transmitter (4,035 kc)
4	Crystal Holder FT–243 with crystal, for transmitter (4,080 kc)
4	Crystal Holder FT–243 with crystal, for transmitter (4,165 kc)
4	Crystal Holder FT–243 with crystal, for transmitter (4,240 kc)
4	Crystal Holder FT–243 with crystal, for transmitter (4,280 kc)
4	Crystal Holder FT–243 with crystal, for transmitter (4,330 kc)
4	Crystal Holder FT–243 with crystal, for transmitter (4,397.5 kc)
4	Crystal Holder FT–245 with crystal, for transmitter (4,445 kc)
4	Crystal Holder FT–243 with crystal, for transmitter (4,495 kc)
4	Crystal Holder FT–243 with crystal, for transmitter (4,540 kc)
4	Crystal Holder FT–243 with crystal, for transmitter (4,580 kc)
4	Crystal Holder FT–243 with crystal, for transmitter (4,635 kc)
4	Crystal Holder FT–243 with crystal, for transmitter (4,710 kc)
4	Crystal Holder FT–243 with crystal, for transmitter (4,780 kc)
4	Crystal Holder FT–243 with crystal, for transmitter (4,840 kc)

Quantity	Item
4	Crystal Holder FT–243 with crystal, for transmitter (4,880 kc)
4	Crystal Holder FT–243 with crystal, for transmitter (4,930 kc)
4	Crystal Holder FT–243 with crystal, for transmitter (4,980 kc)
4	Crystal Holder FT–243 with crystal, for transmitter (5,030 kc)
4	Crystal Holder FT–243 with crystal, for transmitter (5,127.5 kc)
4	Crystal Holder FT–243 with crystal, for transmitter (5,205 kc)
4	Crystal Holder FT–243 with crystal, for transmitter (5,245 kc)
4	Crystal Holder FT–243 with crystal, for transmitter (5,285 kc)
4	Crystal Holder FT–243 with crystal, for transmitter (5,327.5 kc)
4	Crystal Holder FT–243 with crystal, for transmitter (5,397.5 kc)
4	Crystal Holder FT–243 with crystal, for transmitter (5,437.5 kc)
4	Crystal Holder FT–243 with crystal, for transmitter (5,500 kc)

Quantity	Item
4	Crystal Holder FT–243 with crystal, for transmitter (5,545 kc)
4	Crystal Holder FT–243 with crystal, for transmitter (5,587.5 kc)
4	Crystal Holder FT–243 with crystal, for transmitter (5,645 kc)
4	Crystal Holder FT–243 with crystal, for transmitter (5,687.5 kc)
4	Crystal Holder FT–243 with crystal, for transmitter (5,730 kc)
4	Crystal Holder FT–243 with crystal, for transmitter (5,780 kc)
4	Crystal Holder FT–243 with crystal, for transmitter (5,820 kc)
4	Crystal Holder FT–243 with crystal, for transmitter (5,860 kc)
4	Crystal Holder FT–243 with crystal, for transmitter (5,907.5 kc)
4	Crystal Holder FT–243 with crystal, for transmitter (5,950 kc)
4	Crystal Holder FT–243 with crystal, for transmitter (5,995 kc)
2	TM 11–235

63. Frequency Conversion Kit MC–518

Frequency Conversion Kit MC–518 consists of case CS–113 (fig. 48) containing three Frequency Conversion Kits MC–534.

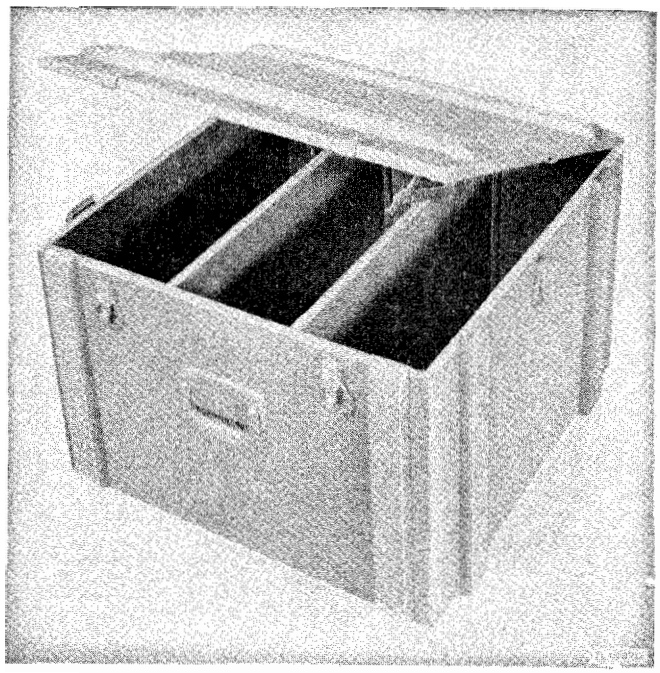

Figure 48. Case CS–113.

PART FIVE

REPAIR INSTRUCTIONS

Note. Failure or unsatisfactory performance of equipment used by Army Ground Forces and Army Service Forces will be reported on WD AGO Form 468 (Unsatisfactory Equipment Report); by Army Air Forces, on Army Air Forces Form 54 (unsatisfactory report). If either form is not available, prepare the data according to the sample form reproduced in figure 69.

Section XIV. THEORY OF EQUIPMENT

64. Block Diagram of Radio Set SCR–536–(*)

a. General. Radio Set SCR–536–(*) consists of a number of interlocking circuits which provide rapid change-over from receive to transmit. The transmitted signal is of the same frequency as the received signal. The five stages of Radio Receiver and Transmitter BC–611–(*) are all used in the receive position. Only four of the stages are used in the transmit position. The receiver and transmitter frequency is preset for the operator prior to use and cannot be changed or adjusted by the operator.

b. Receiver. Figure 49 shows the signal paths through the receiver and transmitter. The same antenna is used for reception and transmission. The received signal voltage is amplified by tube VI and applied to the signal grid of tube V2. In converter tube V2, the incoming signal is mixed with the oscillator signal generated in the same tube, producing a beat frequency of 455 kc. The oscillator uses a

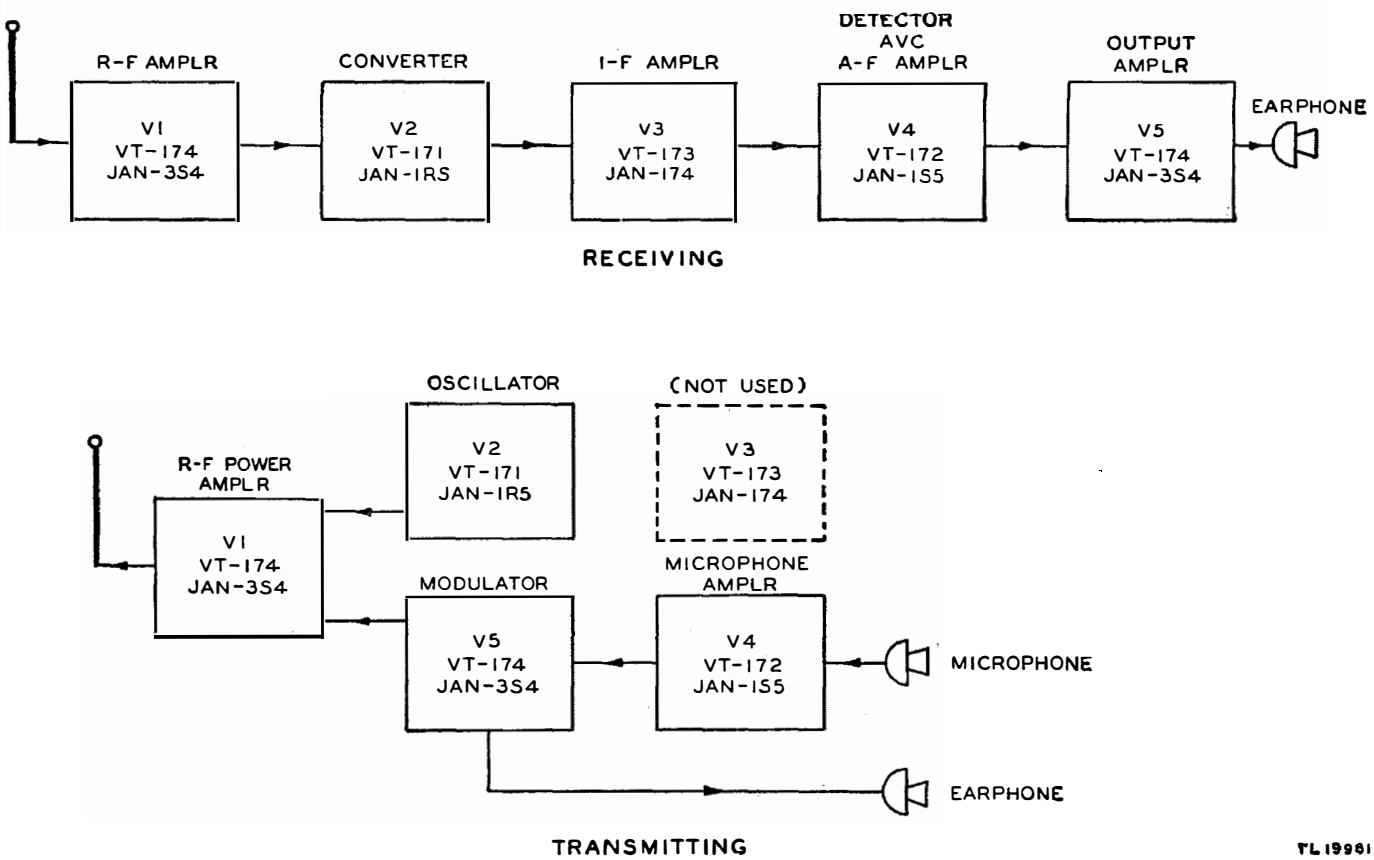

Figure 49. Radio Set SCR–536–(*), block diagram.

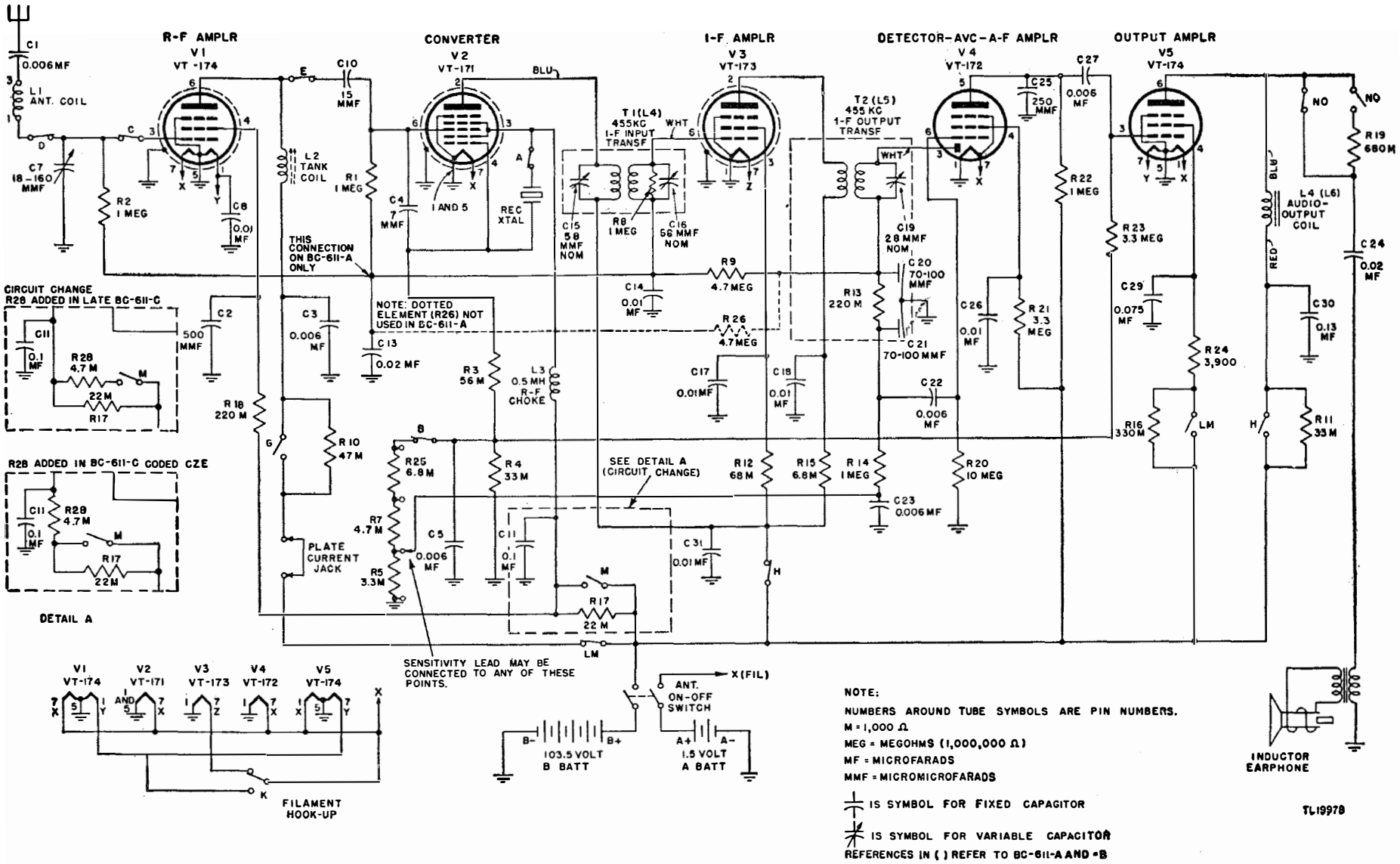

Figure 50. Radio Sets SCR-536-A through -E, functional diagram of receiver.

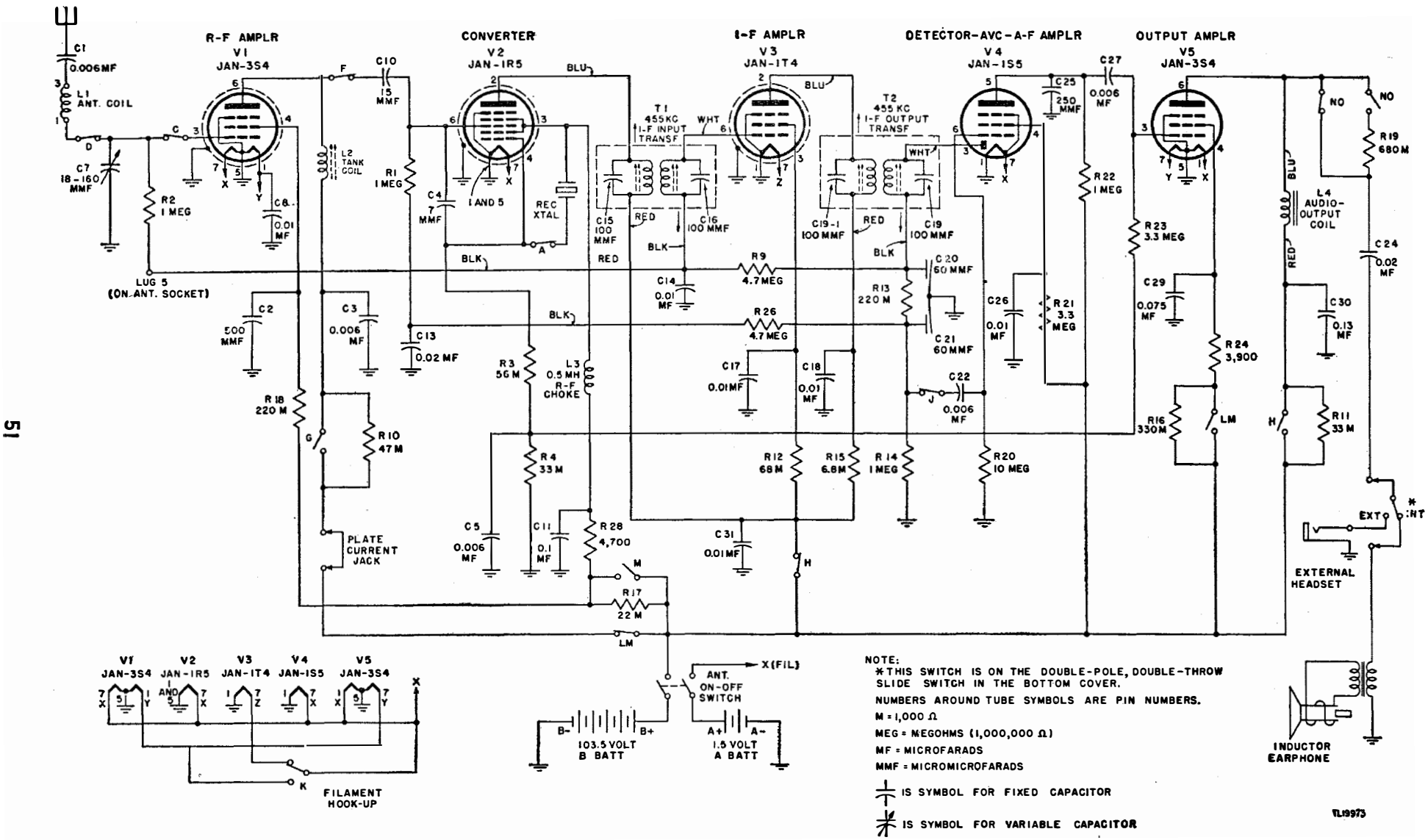

Figure 51. Radio Set SCR-536-F, functional diagram of receiver.

crystal in a Pierce circuit, and functions at 455 kc above the carrier (or incoming signal) frequency. The receiver crystal, therefore, is 455 kc higher in frequency than the transmitter crystal. The beat frequency (or i-f signal) produced in the converter tube is amplified by tube V3 and is applied to the diode detector section of tube V4. Here the modulated i-f signal is demodulated and an audio voltage is impressed on the grid of the pentode amplifying section of tube V4. The amplified a-f (audio-frequency) signal is then applied to the grid of tube V5, the power amplifier, where it is amplified, and then applied to the earphone.

c. TRANSMITTER. In the transmit position, only four tubes are used. The r-f carrier wave is generated in the oscillator section of tube V2, again using a Pierce crystal-controlled circuit with a crystal 455 kc lower in frequency than that used for the receiver. The generated r-f voltage is applied to the grid of tube V1 where it is amplified and fed to the antenna. The microphone output is amplified by the pentode section of tube V4 and then applied to the grid of tube V5 where it is further amplified. The earphone is connected across the audio output of modulator tube V5 to provide sidetone. The audio output modulates the amplified carrier output of tube V1.

65. Circuit Description

The following paragraphs describe the function of each circuit element in the receiver and transmitter circuits. See the functional and complete schematic diagrams in figures 50 to 55.

66. Receiver R-F Amplifier

Capacitor C1 (in the antenna input circuit) is not necessary in the receiver circuit, but serves to block the d-c component of the plate voltage from the antenna rod in the transmitter circuit. The plug-in inductance L1 (marked ANTENNA) is a loading coil which aids in resonating the antenna to the preset frequency. The antenna is series-tuned by mica trimmer capacitor C7. The voltage developed across this capacitor is impressed on the grid of r-f amplifier tube V1 through section C of the change-over switch. Resistor R2, the grid resistor of tube V1, provides a d-c path for the bias applied to the grid of tube V1 and a high-impedance path to the r-f current, blocking it from the a-v-c (automatic-volume-control) circuits. Capacitor C8 is an r-f bypass for the filament circuit to reduce regeneration. Capacitor C2 bypasses the r-f current from the screen. Resistor R18 is a screen-dropping and decoupling resistor. The permeability-tuned inductance L2 (marked TANK COIL) provides the r-f plate load for tube V1 and is resonated by a capacitance made up of the distributed capacitance of the coil, the output capacitance of tube V1, the input capacitance of tube V2, and the capacitance of the circuit wiring. Coil L2 is adjusted to its operating frequency by a movable powdered-iron slug. Capacitor C3 and resistor R10 make up a decoupling filter for the plate circuit of tube V1. Resistor R10 also serves to lower the plate voltage of tube V1, reducing its plate current and giving more economical operation of the B battery. Only one filament section (pins 1 and 5) of tube V1 is used in the receiver circuit. This arrangement reduces the A battery drain.

Note. Capacitors C2, C5, and C23, and resistors R3 and R4 in Radio Receiver and Transmitters BC–611–A through –E are molded in a plastic ring surrounding the socket connections of tube V1 and cannot be replaced individually.

67. Converter

Converter tube V2 combines the functions of a mixer and oscillator in a single tube. Capacitor C10 is the coupling capacitor which provides passage for the r-f signal current to the mixer grid of tube V2 through section E (section F on BC–611–F) of the change-over switch, but blocks the direct current. Resistor R1 is the grid resistor of tube V2. Resistors R3 and R4 make up the grid leak which provides the bias voltage for the oscillator grid. Resistor R4 is also used to bias audio output tube V5. A voltage suitable for biasing purposes is produced across these resistors because of the d-c component of the grid current which exists as a result of driving the oscillator grid positive. In Radio Receiver and Transmitters BC–611–A through –E, resistors R25, R7, and R5 make up a voltage divider to provide the proper bias for receiving. These resistors are not present in BC–611–F which uses fixed (nonadjustable) bias. Capacitors C13 and C14 and resistors R9 and R26 (R26 is not used in BC–611–A) make up filters for the a-v-c voltage applied to the grids of tubes V1, V2, and V3. This a-v-c voltage is obtained from the detector load resistance made up of resistors R13 and R14. The filters remove the audio component of the detector voltage from the d-c component which is used for automatic volume control. Capacitors C5 and C23 (C23 is not used on BC–611–F) are r-f bypass capacitors to prevent voltage of the oscillator frequency from getting to the grids of the other tubes through the bias system. Capacitor C4 is a neutralizing capacitor. It reduces the voltage of the oscillator frequency on

the signal grid (which is due to coupling within the tube) by feeding back a voltage of the oscillator frequency out of phase with the internally coupled voltage. R-f choke L3 is a shunt-feed arrangement for the screen grid of tube V2. It provides a low-resistance d-c path and a high-impedance r-f path to the screen grid. The receiver crystal connected between the oscillator grid and the screen grid (plate of oscillator section) provides the necessary coupling for oscillation. This circuit is known as a Pierce oscillator circuit. Capacitor C11 and resistors R17 and R28 make up a decoupling filter for the screen circuit of tube V2. Resistor R28 is not used on BC–611–A and –B, and early issues of BC–611–C. It has been added to sets coded CZE (late issues of BC–611–C), and BC–611–D, –E, and –F. It is added for further decoupling and for dropping the screen voltage sufficiently to stabilize bias voltage when crystals of higher than normal activity are used in the transmit position. Capacitor C31 is the r-f bypass for the plate circuit of tube V2.

Note. Capacitors C3 and C13 and resistor R1 in BC–611–A through –E are molded in a plastic ring surrounding the socket connections of tube V2 and cannot be replaced individually.

68. I-F Amplifier

The first i-f transformer T1 (L4 in BC–611–A and –B models) is wound on iron cores. In BC–611–A through –E, it is surrounded by an iron sleeve to increase the inductance of the primary and secondary coils and to reduce their size. The coils are tuned by the trimmers C15 and C16 and resistor R8 contained within the shield serves to broaden the response of the transformer. In BC–611–F the iron sleeve has been replaced by powdered-iron cups; the coils are tuned by two tuning slugs, one at each end of the transformer, and R8 is omitted. Capacitors C15 and C16 have been changed from adjustable trimmers to fixed mica capacitors and are located at the ends of the transformer. In BC–611–A through –E only, Capacitor C17 and voltage-dropping resistor R12 make up a decoupling filter for the screen grid of tube V3. Capacitor C18 and resistor R15 comprise a decoupling filter for the plate circuit of tube V3.

Note. Capacitors C14, C17, C18, and C31, and resistors R12 and R15 in BC–611–A through –E are molded in a plastic ring surrounding the socket connections of tube V3 and cannot be replaced individually.

69. Detector, Automatic Volume Control, and First Audio Amplifier

Tube V4 consists of a diode detector and a pentode amplifier combined in one tube. In BC–611–A through –E, the second i-f transformer T2 (L5 in BC–611–A and –B models) consists of two windings, each wound on an iron core and surrounded by an iron sleeve to increase the inductance of the primary and secondary coils and to reduce their size. Trimmer C19 tunes the secondary. In BC–611–F the iron sleeve has been replaced by powdered-iron cups. Both primary and secondary coils are tuned by tuning slugs, one at each end of the transformer. Capacitor C19 has been changed from an adjustable trimmer to a fixed mica capacitor, and fixed mica capacitor C19.1 has been added. These two capacitors in BC–611–F are located at the ends of the transformer to complete the tuned circuits. Resistor R14 is the detector load across which the audio voltage is obtained. Resistor R13 and capacitors C20 and C21 make up a filter to remove the i-f component from the audio component of the detector voltage. Capacitor C22 couples the detector to the grid of the pentode audio-amplifier section of tube V4. Resistor R20 is the grid resistor of the amplifier section of tube V4. Grid current which flows through the resistor on large signal inputs provides additional bias for this tube. Resistor R22 is the plate load of tube V4. Capacitor C25 is an i-f bypass to eliminate any i-f current which exists in the plate circuit from getting into audio plate load resistor R22. Capacitor C26 and dropping resistor R21 make up a decoupling filter for the screen. Capacitor C27 is the coupling capacitor from the first audio amplifier to the power output amplifier.

Note. Capacitors C25, C26, and C27 and resistors R9, R14, R21, and R22 in BC–611–A through –E are molded in plastic rings surrounding the socket connections of tube V4 and cannot be replaced individually.

70. Receiver Power Output Amplifier

Capacitor C27 is the coupling capacitor from the first audio amplifier to power output amplifier tube V5. Resistor R23 is the grid resistor of tube V5. Capacitor C29 and voltage-dropping resistors R24 and R16 make up a decoupling filter for the screen grid of tube V5. Resistor R16 is used in the receiver circuit to reduce battery drain by lowering the screen current. A-f choke L4 (L6 in BC–611–A and –B) provides a low-resistance d-c path for the plate current and offers a high-impedance path to the a-f plate current. Capacitor C30 and resistor R11 make up a plate decoupling filter. Resistor R11 also serves as a dropping resistor to lower the plate voltage. Capacitor C24 couples the audio output from the plate to the output transformer for the

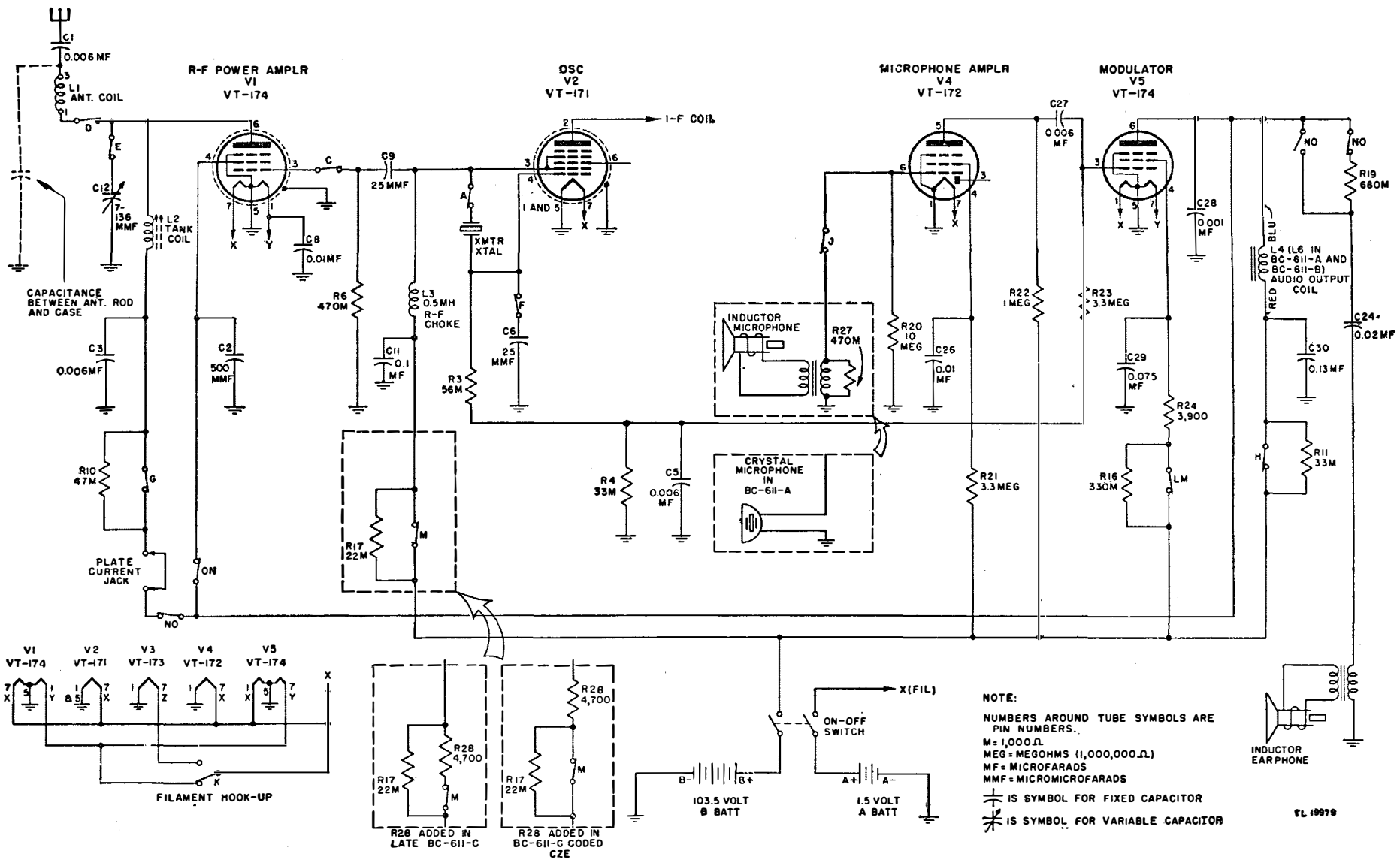

Figure 52. Radio Sets SCR-536-A through -E, functional diagram of transmitter.

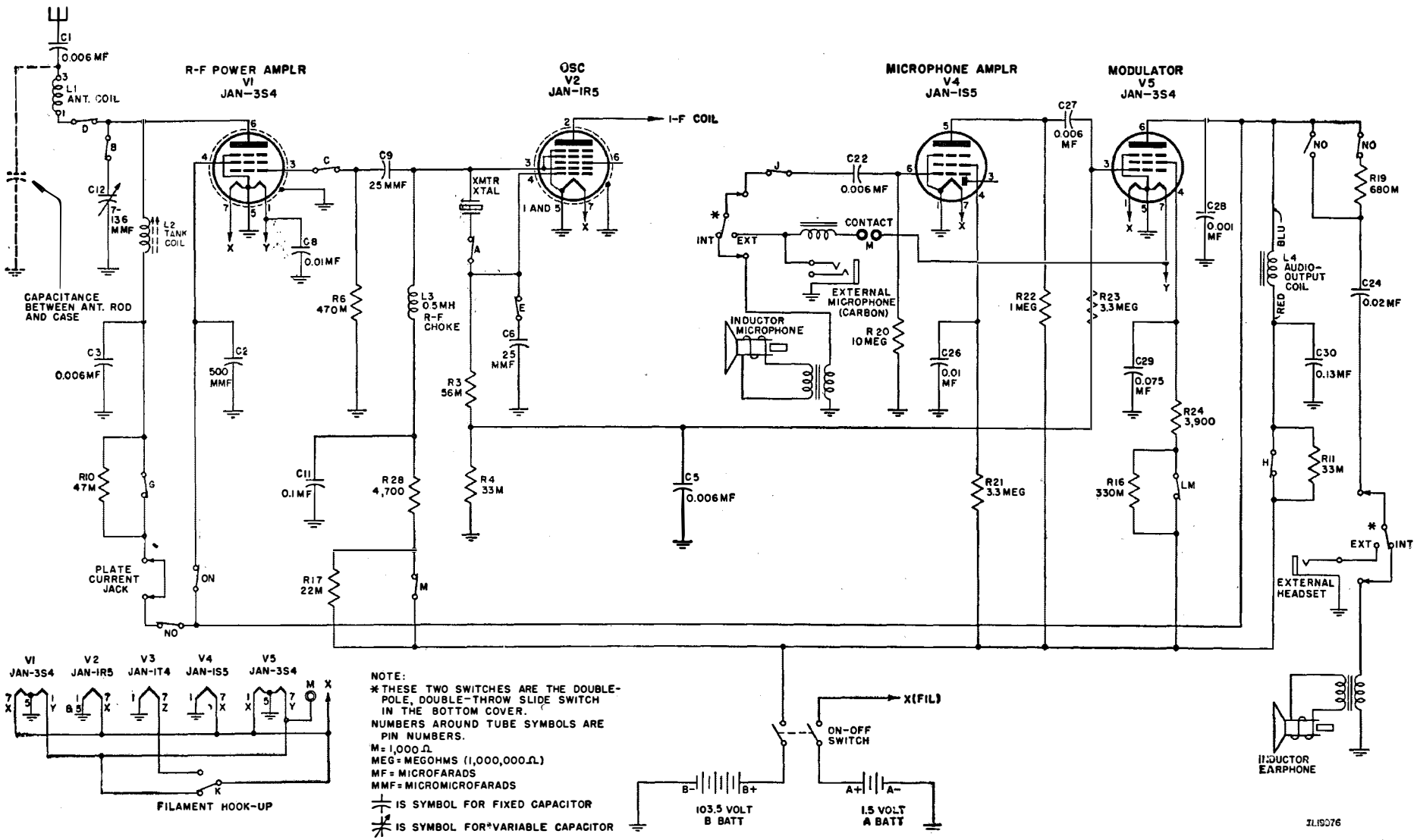

Figure 53. Radio Set SCR-536-F, functional diagram of transmitter.

earphone. Only one filament section (pins 1 and 5) of tube V5 is used in the receive position. This arrangement reduces the A battery drain.

71. Transmitter Oscillator

In the transmit position, only the oscillator section of converter tube V2 is used. The filament (pins 5 and 7) as the cathode, the screen grid (pin 3) as the plate, and the signal grid (pin 4) make up the triode oscillator section. The mixer section, with its associated circuits, is not used while transmitting. The transmitter crystal serves as the tuned circuit which determines the fixed frequency at which the oscillator functions. Resistors R3 and R4 make up the grid leak which provides the bias voltage for the oscillator grid. The d-c component of the voltage developed across resistor R4 is used also for the grid bias to modulator tube V5. Capacitor C6 determines the amount of feedback from the crystal circuit to the grid. Resistor R28 reduces the screen voltage, eliminating the possibility of oscillator failure when using an oscillator tube with low emission. Resistor R28 has been added to BC–611–C models coded CZE, and to BC–611–D, –E, and –F. R-f choke L3 keeps the oscillator output from flowing through the B battery to ground, forcing the generated r-f current to flow to the grid of the r-f amplifier tube. Capacitor C11 bypasses stray r-f current to ground.

72. Transmitter R-F Amplifier

Blocking capacitor C9 couples the oscillator output to r-f amplifier tube V1. Resistor R6 is the grid leak and provides the bias voltage for the grid of tube V1 when transmitting. Capacitor C2 is the r-f bypass for the screen grid. Coil L2 is the plug-in r-f amplifier TANK COIL. Coil L2 is tuned by capacitor C12. Capacitor C12 also acts as the input branch of the pi network to the antenna from the amplifier tank. The capacitance between the antenna rod and the case acts as the other branch of the pi network. In the receiver circuit this antenna capacitance becomes a part of the tuning capacitance of the antenna. In BC–611–F models beginning with serial No. 5635, capacitor C32 is added in parallel across capacitor C12. The plug-in ANTENNA coil L1 is the series branch of the pi network, and also acts as the antenna loading inductance. Capacitor C1 blocks the d-c plate current from the antenna rod. Capacitor C3 is the plate circuit r-f bypass.

73. Microphone Amplifier

Resistor R20 is the grid resistor of tube V4, as in the receiving circuit. The diode detector section of tube V4 is not used in the transmitter circuit. Resistor R27 (not used in BC–611–A and –F) acts as the load resistor for the inductor microphone. Capacitor C26 and voltage-dropping resistor R21 make up a decoupling filter for the screen grid of tube V4. Resistor R22 is the plate load.

74. Modulator

Capacitor C27 is the coupling capacitor from the microphone amplifier to modulator tube V5. Resistor R23 is the grid resistor. Capacitor C29 and resistor R24 make up a decoupling filter for the screen grid of tube V5. Choke L4 (L6 in BC–611–A and –B) provides a low-resistance d-c path to the plate of the modulator and r-f amplifier tubes. It also offers a high-impedance load to the a-f plate current output of the modulator forcing it into the r-f amplifier plate circuit. Capacitor C28 provides a low-impedance path around modulation choke L4 for the stray r-f current. This is necessary since the r-f amplifier plate is supplied through choke L4. Resistor R19 prevents overloading of the earphone, because the a-f output for modulating the r-f amplifier is high. Capacitor C24 couples the audio output to the output transformer for the earphone. Capacitor C30 bypasses stray alternating currents to ground.

75. Press-to-talk Switch

The press-to-talk switch operates the change-over mechanism which makes the necessary circuit changes to convert the set from a receiver to a transmitter. The change-over switch is made up of 14 sections. Each section has a name which is marked on the transparent insulating strip covering the change-over switch. For simplicity, however, each section has been designated by a letter of the alphabet on the schematic and functional drawings and this letter also appears on the transparent insulating strip.

a. Section A connects the proper crystal into the circuit.

b. Section B connects the grid bias voltage divider made up of resistors R25, R7, and R5 (R5 is not used in BC–611–F) across resistor R4 in the receive position, and disconnects the voltage divider in the transmit position. In BC–611–F, r-f amplifier tuning capacitor C12 is connected to the plate of tube V1 in the transmit position.

c. Section C connects the control grid of tube V1 to the a-v-c voltage line in the receive position, and connects the control grid to grid-leak resistor R6 in the transmit position.

d. Section D connects the antenna to tuning capacitor C7 in the receive position, and to the plate of the r-f amplifier tube V1 in the transmit position.

e. Section E connects the plate of r-f amplifier tube V1 through the coupling capacitor C10 to the signal grid of converter tube V2 in the receive position, and to the r-f amplifier tank capacitor C12 in the transmit position.

f. Section F connects the oscillator feedback control capacitor C6 to ground in the receive position and connects capacitor C6 to the oscillator grid of tube V2 in the transmit position. In BC–611–C models coded CZE and in BC–611–F, sections E and F have been transposed to shorten their respective leads and to prevent abrasion from the case damaging the insulation. One dummy lug has been added to section F in these later models to serve as a soldering lug.

g. Section G puts voltage-dropping resistor R10 in series with the plate of tube V1 in the receive position and shorts out the resistor in the transmit position.

h. Section H connects the B battery to the plate and screen of tube V3 in the receive position, and disconnects the battery in the transmit position. Section H also puts voltage-dropping resistor R11 in series with the plate of tube V5 in the receive position, and shorts out the resistor in the transmit position.

i. No section I exists on the change-over switch.

j. In BC–611–A through –E section J grounds the microphone in the receive position, thereby eliminating the possibility of pickup from the microphone being introduced into the audio amplifier. In the transmit position section J connects the microphone to the grid of the audio-amplifier section of tube V4. In BC–611–F, section J connects coupling capacitor C22 to the detector in the receive position, and to the microphone in the transmit position.

k. Section K in the receive position connects the filament of tube V3 to the A battery and disconnects one filament section of V1 and V5 from the A battery. Eliminating one of the parallel filaments of tubes V1 and V5 reduces the total A battery drain by 100 ma (milliamperes) in the receive position. In transmit position the filament of tube V3 is eliminated.

l. Sections L and M are tied together electrically through the moving arm of the switch. In the receive position, dropping resistor R16 is placed in series with the screen grid of tube V5 by section L and M. These switch sections also place dropping resistor R17 in series with the screen circuits o tubes V1 and V2 and connect the B battery to the plate of tube V1. In the transmit position, resistors R17 and R16 are shorted out by switch sections L and M.

m. Section M; see *l* above.

n. Sections N and O are tied together electrically through the moving arm of the switch. In the receive position they place the earphone across audio choke L4 (L6 in BC–611–A and –B in the plate circuit of tube V5. In the transmitter circuit, they connect the screen and plate circuits of r-f amplifier tube V1 to the plate of the modulator tube V5. This switch section also places dropping resistor R19 in series with the earphone to reduce the intensity of the signal in the earphone in the transmit position.

o. See *n* above. In BC–611–C models coded CZE, one dummy lug has been added to section O for resistor R28 connection.

Section XV. TROUBLE SHOOTING

Note. Operators are to make no checks other than those which involve removing the bottom cover only. The top cover and chassis are removed by organizational and higher echelon repairmen only.

76. General Trouble-shooting Information

No matter how well equipment is designed and manufactured, faults occur in service. When such faults occur, the equipment must be restored to normal operation in the shortest possible time. This section contains general information to aid personnel engaged in the important duty of trouble shooting. It is essential to establish a logical, rapid, systematic method of procedure for trouble shooting. Do not use haphazard, hit-or-miss trouble shooting methods. While such uncertain methods will sometimes locate the trouble, inefficiency and damage to equipment are almost sure to result.

a. Trouble-shooting Data. Take advantage of the material supplied in this manual to help in the rapid location of faults. Consult the following trouble shooting data when necessary:

(1) Theory of equipment. To perform efficient repair on a set, a thorough knowledge of how and why it works is essential. Study and learn the functional theory of Radio Receiver and Transmitter BC–611–( ) as explained in section XIV, which

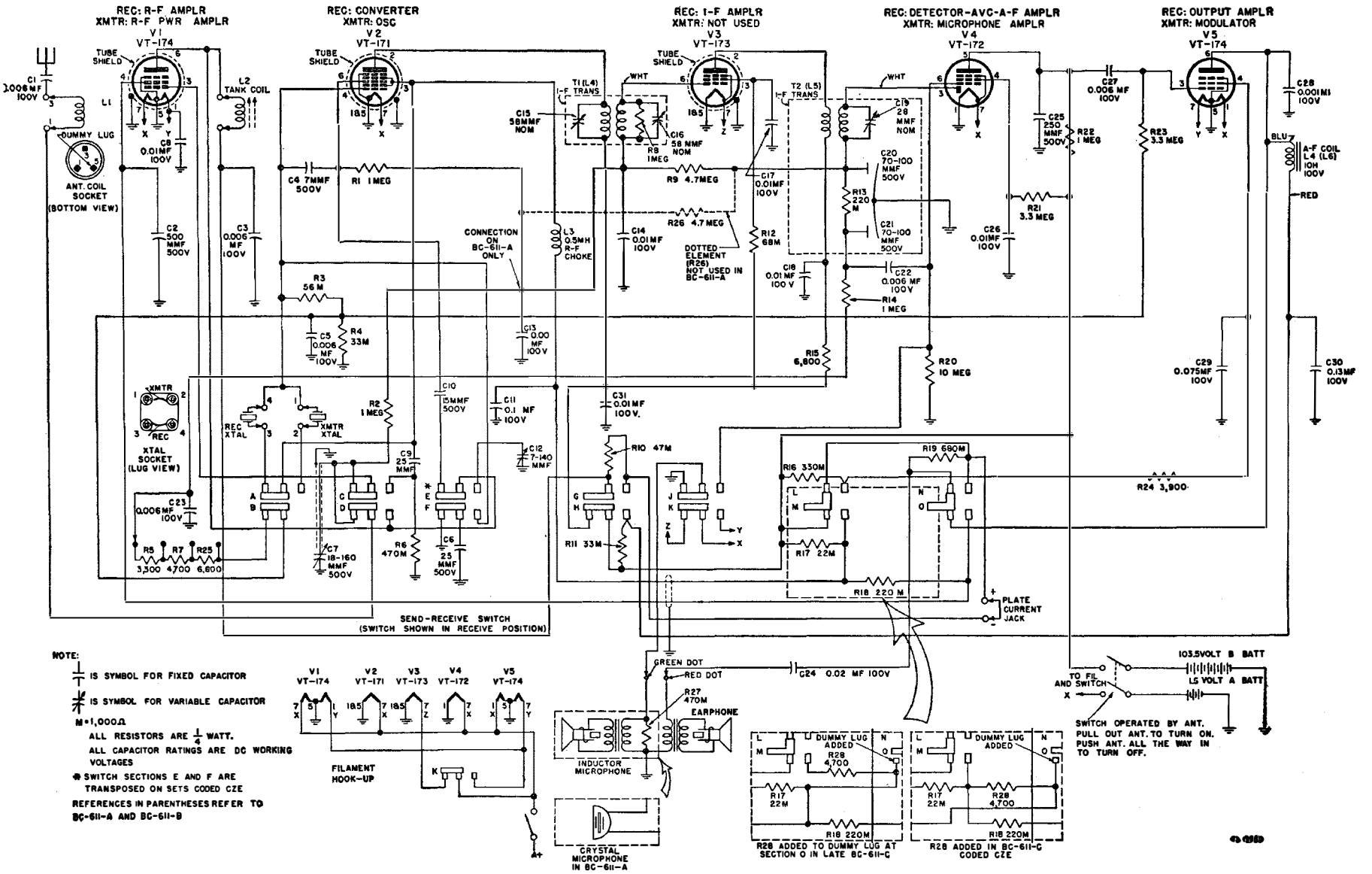

Figure 54. Radio Sets SCR-536-A through -E, complete schematic diagram.

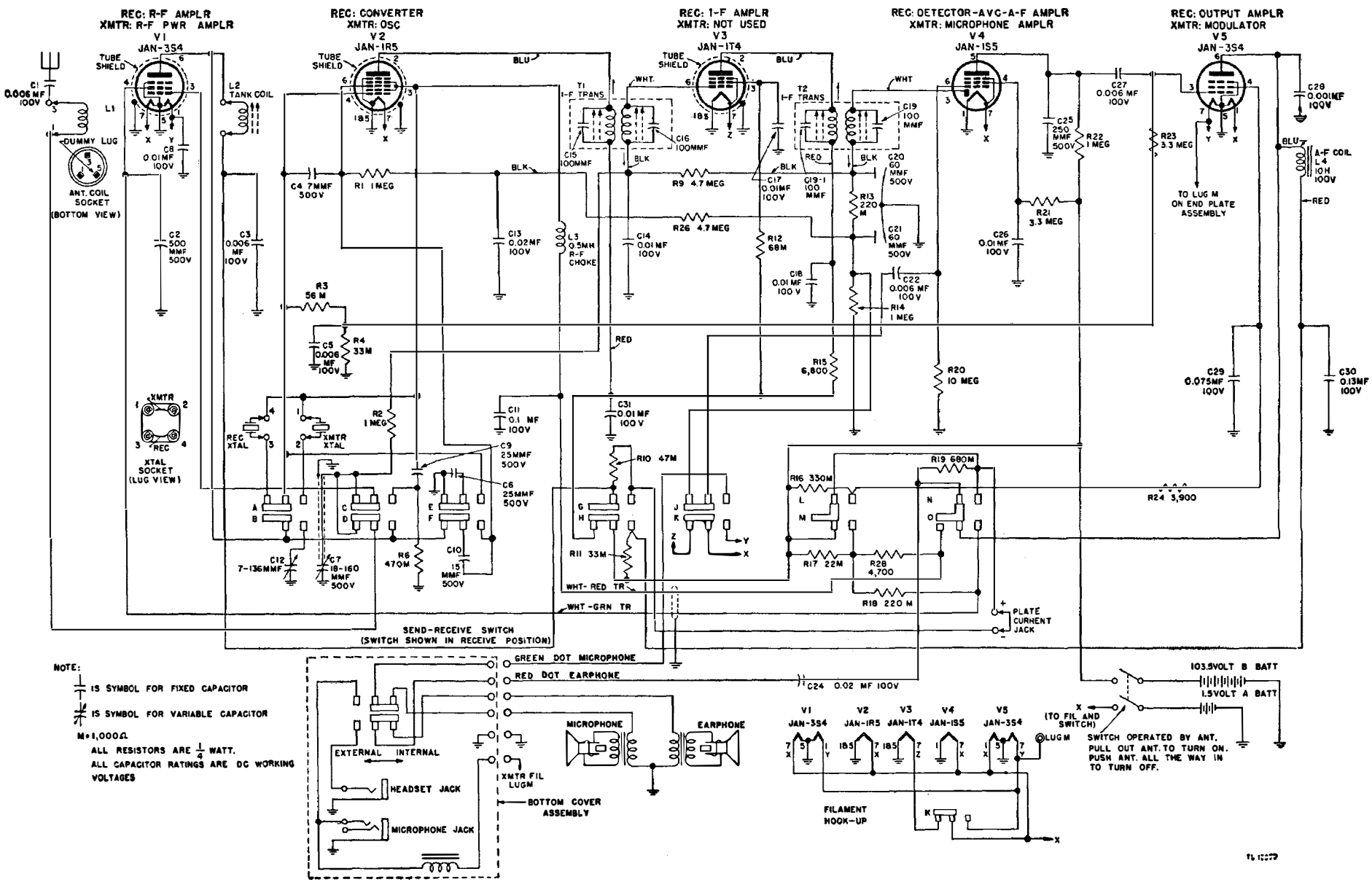

Figure 55. Radio Set SCR-536-F, complete schematic diagram.

analyzes the operation of the set in a logical step-by-step sequence.

(2) Block diagram of Radio Set SCR-536-(*). (See fig. 49.)

(3) Complete schematic diagrams. (See figs. 54 and 55.)

(4) Functional schematic diagrams. (See figs. 50 through 53.) These diagrams are particularly useful in trouble shooting, because the repairman can follow the electrical functioning of the circuits more easily than on the regular schematics, thus speeding trouble location.

(5) Voltage data for all tube socket connections and change-over switch connections. (See figs. 64 and 65.)

(6) Illustrations of components and wiring diagrams. Figures 88 through 93 aid in locating and identifying parts.

(7) Pin connections. Pin connections on sockets, plugs, and receptacles are numbered on the various diagrams.

b. Trouble-shooting Steps. The first step in servicing a defective radio set is to sectionalize the fault. Sectionalization means tracing the fault to the circuit responsible for the abnormal operation of the set. The second step is to localize the fault. Localization means tracing the fault to the defective part responsible for the abnormal condition. Some faults such as burned-out resistors, shorted leads, and broken connections may be located by sight and smell. The majority of faults, however, must be located by voltage and resistance checks and instrument tests.

c. Sectionalization. Careful observation of the performance of the radio set while operating the equipment often sectionalizes the fault to the transmitter circuit or the receiver circuit. Additional sectionalizing of the fault is discussed in pargraphs 84, 85, and 86.

d. Localization. Paragraph 87 describes the method of localizing faults within the receiver and transmitter circuits. This paragraph is accompanied by trouble-shooting charts which list abnormal symptoms and their probable causes. The charts also give the procedure for determining which of the probable locations of the fault is the exact one. In addition, there are drawings which show the voltage at each tube socket connection and changeover switch connection.

e. Voltage Measurements. Voltage measurements are an almost indispensable aid to the repairman, because most troubles either result from abnormal voltages or produce abnormal voltage. Voltage measurements are taken easily, because they are always made between two points in a circuit and the circuit need not be interrupted.

(1) The voltages listed on the voltage charts are measured between the indicated points and ground.

(2) Always begin by setting the voltmeter on the highest range so that the voltmeter will not be overloaded. Then, if it is necessary to obtain increased accuracy, set the voltmeter to a lower scale.

(3) Do not take voltage readings across grid coupling capacitors, because of possible damage to the circuit.

f. Voltmeter Loading. It is essential that the voltmeter resistance be at least 10 times as large as the resistance of the circuit across which the voltage is measured. If the voltmeter resistance is comparable to the circuit resistance, the voltmeter will indicate a voltage lower than the actual voltage present when the voltmeter is removed from the circuit.

(1) The resistance of the voltmeter on any range can always be calculated by the following simple rule: Resistance of the voltmeter equals the ohms per volt multiplied by the full-scale range in volts. For example: The resistance of a 1,000-ohm-per-volt meter on the 300-volt range is 300,000 ohms (R=1,000 ohms-per-volt times 300 volts=300,000 ohms).

(2) To minimize the voltmeter loading in high-resistance circuits, use the highest voltmeter range. Although only a small deflection will be obtained (possibly only 5 divisions on a 100-division scale), the accuracy of the voltage measurement will be increased. The decreased loading of the voltmeter will more than compensate for the inaccuracy which results from reading only a small deflection on the scale of the voltmeter.

(3) When a voltmeter is loading a circuit, the effect can always be noted by comparing the voltage reading on two successive ranges. If the voltage readings on the two ranges do not agree, voltmeter loading is excessive. The reading (not the deflection) on the highest range will be greater than that on the lowest range. If the voltmeter is loading the circuit heavily, the deflection of the pointer will remain nearly the same when the voltmeter is shifted from one range to another.

(4) The ohm-per-volt sensitivity of the voltmeter used to obtain the readings recorded on the voltage and resistance charts in this manual is printed on each chart. Use a meter having the same ohm-per-volt sensitivity; otherwise it will be necessary to consider the effect of loading.

77. Test Equipment IE–15–A

a. Purpose. This test equipment is used in the testing, alignment (secs. XVII and XIX), and presetting (sec. XVIII) of Radio Receiver and Transmitter BC–611–( ).

b. Components. Test Equipment IE–15–A consists of the following components (fig. 56):

Test Stand FT–252–A, including dummy antenna and r-f galvanometer. (See par. 78.)
Test Case CS–81–A. (See par. 79.)
Milliammeter, d-c, 0–50 scale.
Milliammeter, d-c, 0–15 scale.
Harness.
Feedback capacitor.

c. Supplementary Equipment. The following additional equipment is required when using Test Equipment IE–15–A:

R-f signal generator.
Test Set I–56–( ). (See par. 80.)
Frequency Meter Set SCR–211–( ).
Battery BA–40, or equivalent.
Microphone.
Headset.
Insulated tuning screw driver.
Small screw driver.

78. Test Stand FT–252–( ) (fig. 57)

a. There are two clamps on the test stand to hold the test case or radio chassis.

b. Antenna A–82–( ), mounted on the test stand, consists of a 50-milliampere r-f milliammeter to measure antenna current, and a receiver and transmitter dummy antenna comprising a receive-transmit switch, a 56-ohm resistor, and a variable capacitor.

c. A special test harness cord supplied with the stand provides connections for the batteries, r-f amplifier plate current meter, total B current meter, audio output meter, earphone, and microphone. The schematic drawing of this harness is shown in figure 58. The 15-milliampere meter is used to measure the r-f amplifier plate current; the 50-milliampere meter is used to measure the total Battery BA–38 current. The terminal board attached to the harness provides a simple method of making the connections to the chassis.

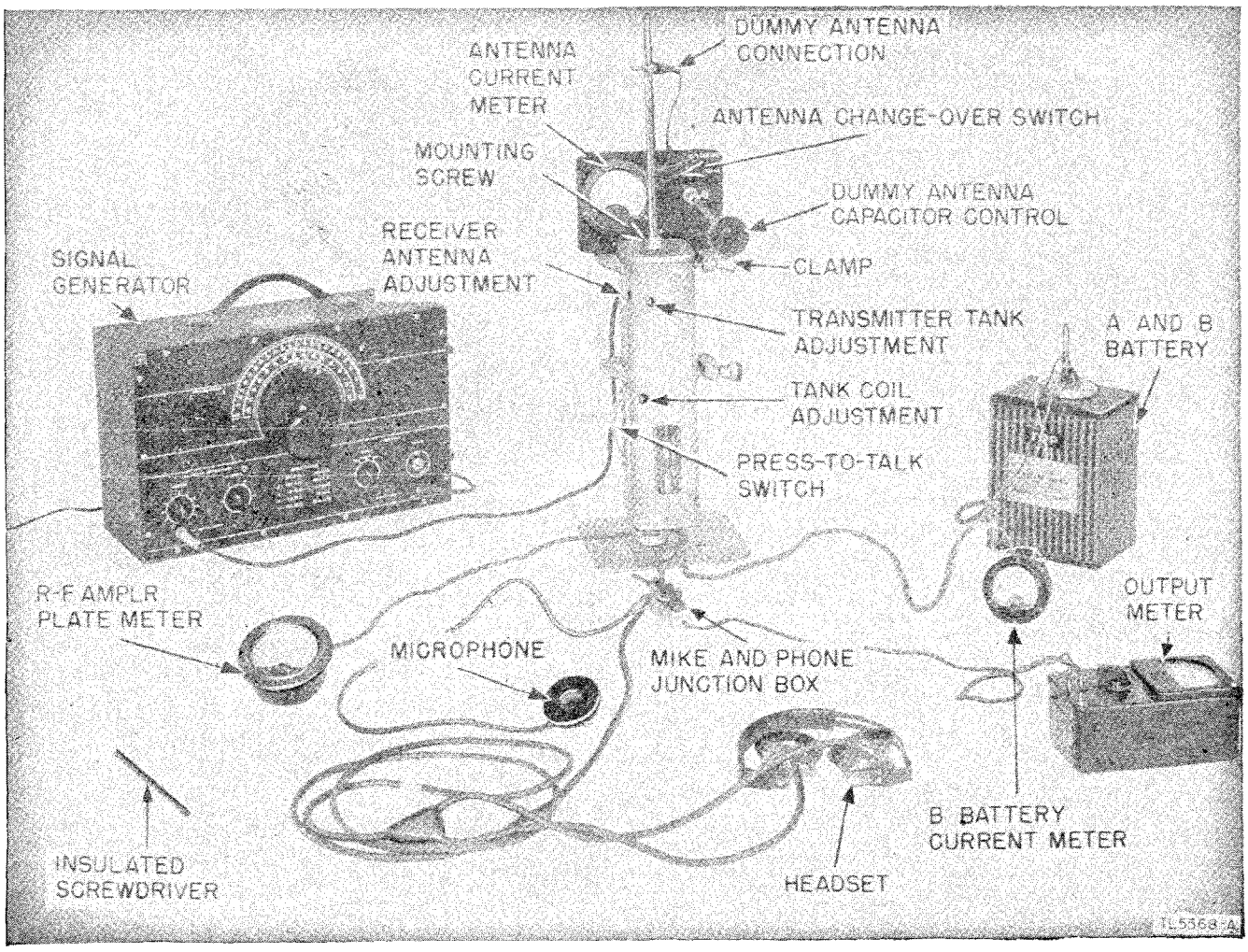

Figure 56. Test Equipment I–15–A, set up.

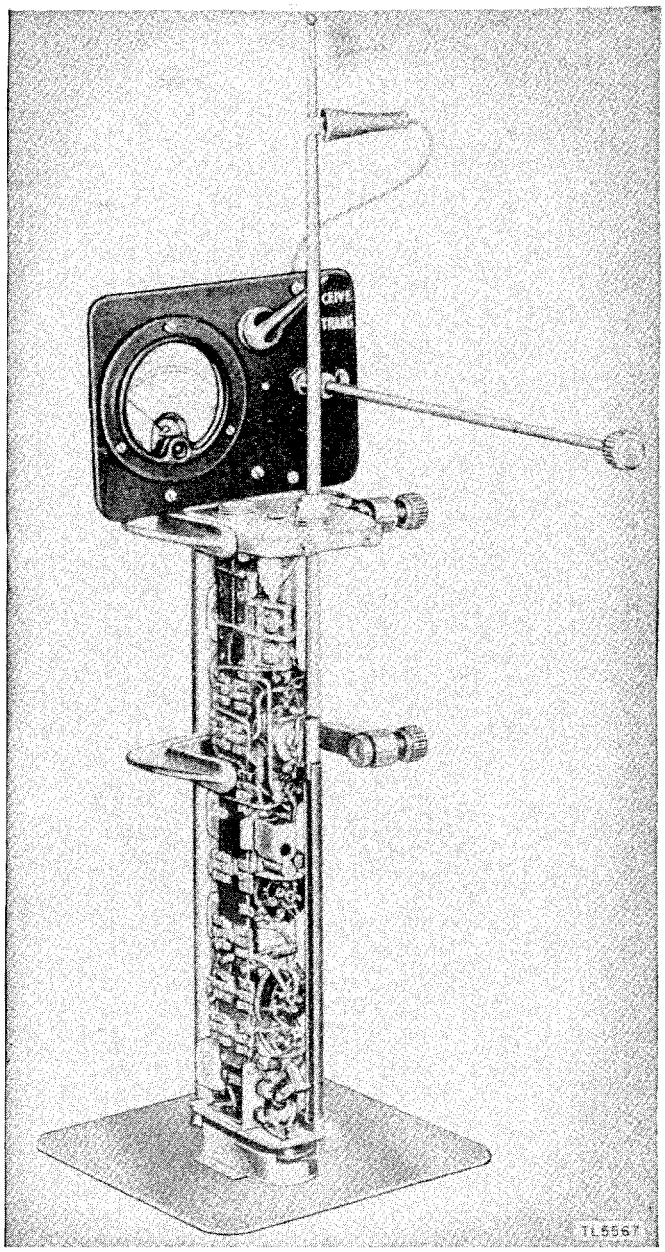

Figure 57. Test Stand FT-252.

79. Test Case CS-81-( ) (figs. 56 and 59)

Since the tuning adjustments are inaccessible when the chassis is covered by the radio set housing, a special housing is required to make these adjustments. Test Case CS-81-( ) is similar to the radio set housing except that holes are provided to permit access to the chassis adjustments and that there are no microphone and earphone projections. Use of the test case permits tuning the set under conditions identical to those of normal operation. The presetting adjustments should be made only with the chassis in the test case; otherwise, the set will be detuned when it is inserted into the regular housing. This detuning or misalignment results from the additional capacitance introduced into the circuit by the housing.

Note. An altered Test Case CS-81-( ) must be used when making adjustments on BC-611-F and later models. MWO SIG 11-311-1, which authorizes the equipment modification, describes the proper method of altering Test Case CS-81-( ). (See fig. 60.)

80. Test Set I-56-( )

Since the receiver output is designed to operate into a high-impedance earphone, the output meter provided in Test Set I-56-( ) is unsatisfactory for alignment purposes because of its low internal resistance. This output meter has a resistance of only 4,000 ohms. A vacuum tube voltmeter with a minimum input impedance of 10 megohms is preferable; however, the a-c voltmeter of the selective analyzer of Test Set I-56-( ) makes a satisfactory output meter if the 50-volt a-c range is used. Since the meter sensitivity is 1,000 ohms per volt, 50,000 ohms is placed across the receiver output when the 50-volt range is used. No external blocking capacitor in series with the a-c output meter is necessary to pre-

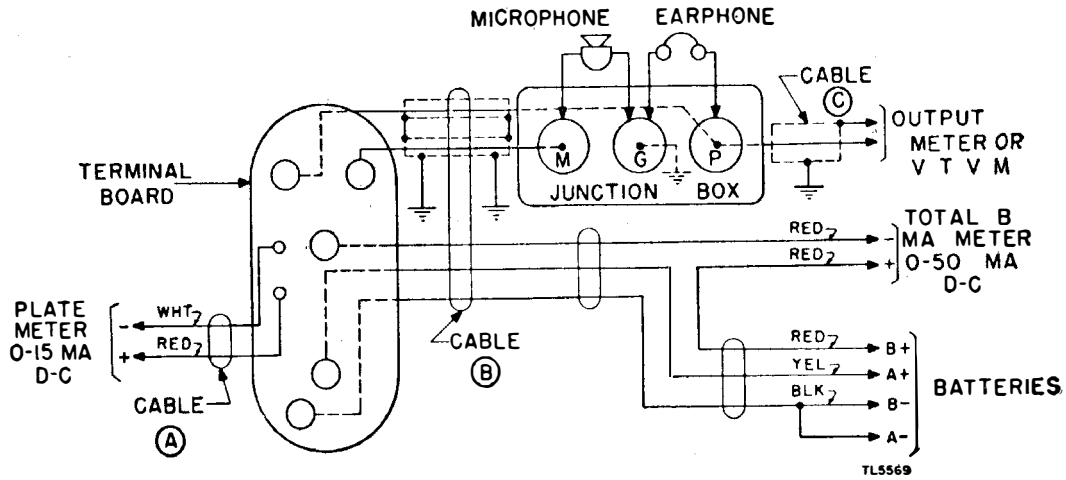

Figure 58. Test Equipment IE-15-A, harness connections.

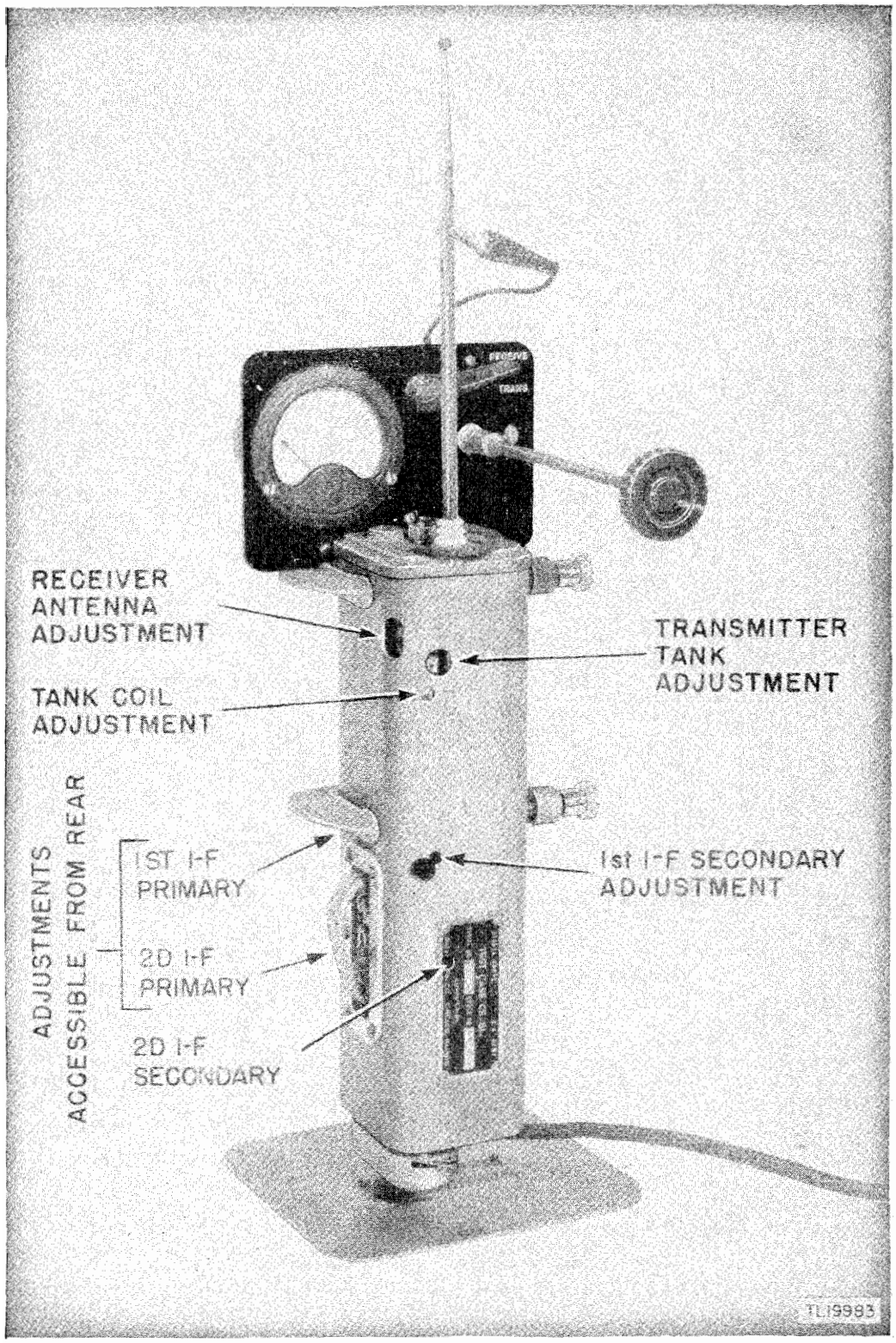

Figure 59. Test Case CS-81-( ) showing adjustments for BC-611-F.

vent the Battery BA-38 voltage from reaching the meter, as one is contained in the receiver circuit. The output meter leads of the test harness (par. 78) are fitted with jack tips, so they can be plugged into the voltmeter.

81. Test Equipment IE-17-( )

a. PURPOSE. The purpose of this test equipment is the same as that of Test Equipment IE-15-A. (See par. 77.) Test Equipment IE-17-E is described in TM 11-311.

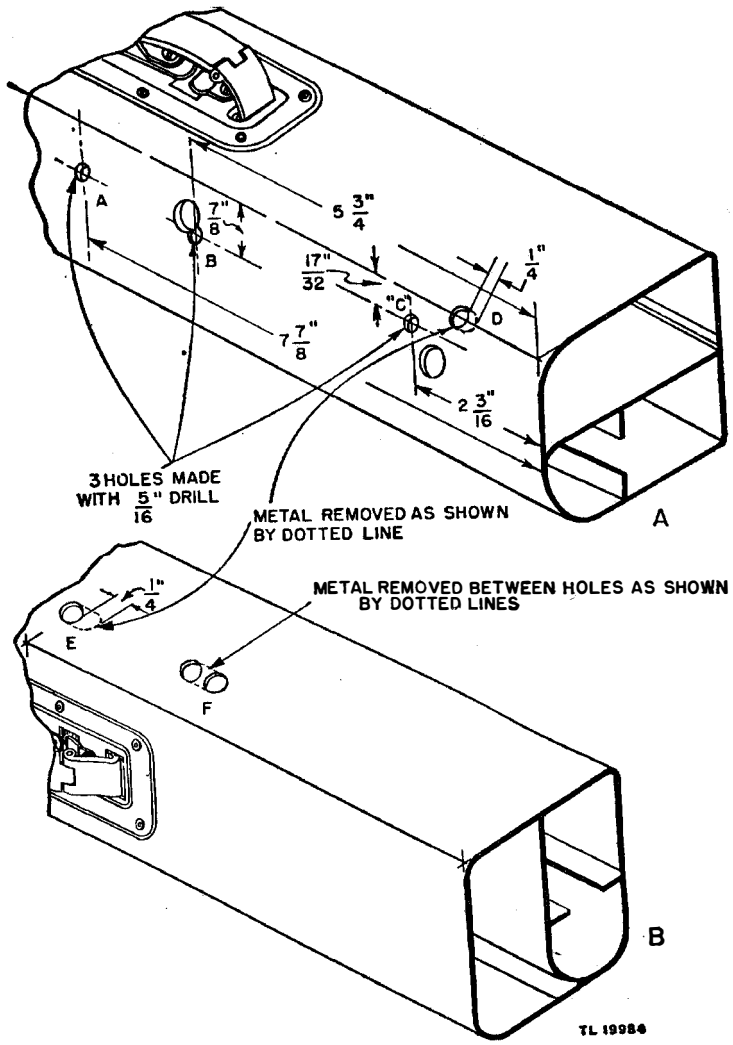

Figure 60. Test Case CS–81–( ) modification.

b. Components. Test Equipment IE–17–( ) consists of the following components (fig. 61):

Test Stand FT–252–( )
Antenna A–82–( )
Test Case CS–81–( )
Test Unit I–135–( )

82. Test Unit I–135–( )

Test Unit I–135–( ) contains a multirange voltmeter and milliammeter, a crystal tester, and an r-f and a-f signal source. (See fig. 62.) The test unit is used for measuring battery voltage and current, r-f amplifier plate current audio output voltage, and crystal activity. In addition, it supplies a modulated r-f signal source for the test, alignment, and presetting of the receiver and an a-f signal source for determining the modulation capability of the transmitter. It combines in one case all the meters and additional apparatus required for use with Test Equipment IE–15–A. (See par. 76.)

a. The r-f signal source is a Pierce crystal oscillator and makes use of a crystal such as the one contained in the transmitter circuit of Radio Receiver and Transmitter BC–611–( ). The oscillator circuit is used to generate a signal of the carrier frequency, and also serves to check the activity of the receiver crystal and the transmitter crystal.

b. The a-f signal source is a Colpitts oscillator which generates a signal of 1,000 cycles per second. This tone is used to modulate the r-f oscillator and can be applied also to the microphone input terminals of the transmitter to test for modulation capability.

c. A test harness attached to the test unit provides the means for connecting the test unit to the chassis. The insulated screw driver attached to the cover of the test unit is used for making adjustments.

d. Compartments are provided in the test unit for Battery BA–37 and Battery BA–38 to permit these batteries to be tested under load. (See fig. 63.) Also, connections are provided for the use of ex-

ternal batteries. A heavyduty 1.5-volt battery (such as Battery BA–23 or Battery BA–35) and a heavyduty 90-volt battery (such as two Batteries BA–26 or two Batteries BA–36) will be satisfactory for all alignment and testing purposes. Battery BA–37 and Battery BA–38 can be used for this purpose, but

(3) BA–37 0–600 MA. D. C., in which position the meter indicates the current drain of the external A battery or Battery BA–37.

(4) BA–38 0–150 V. D. C., in which position the meter indicates the voltage of the external B battery or Battery BA-38.

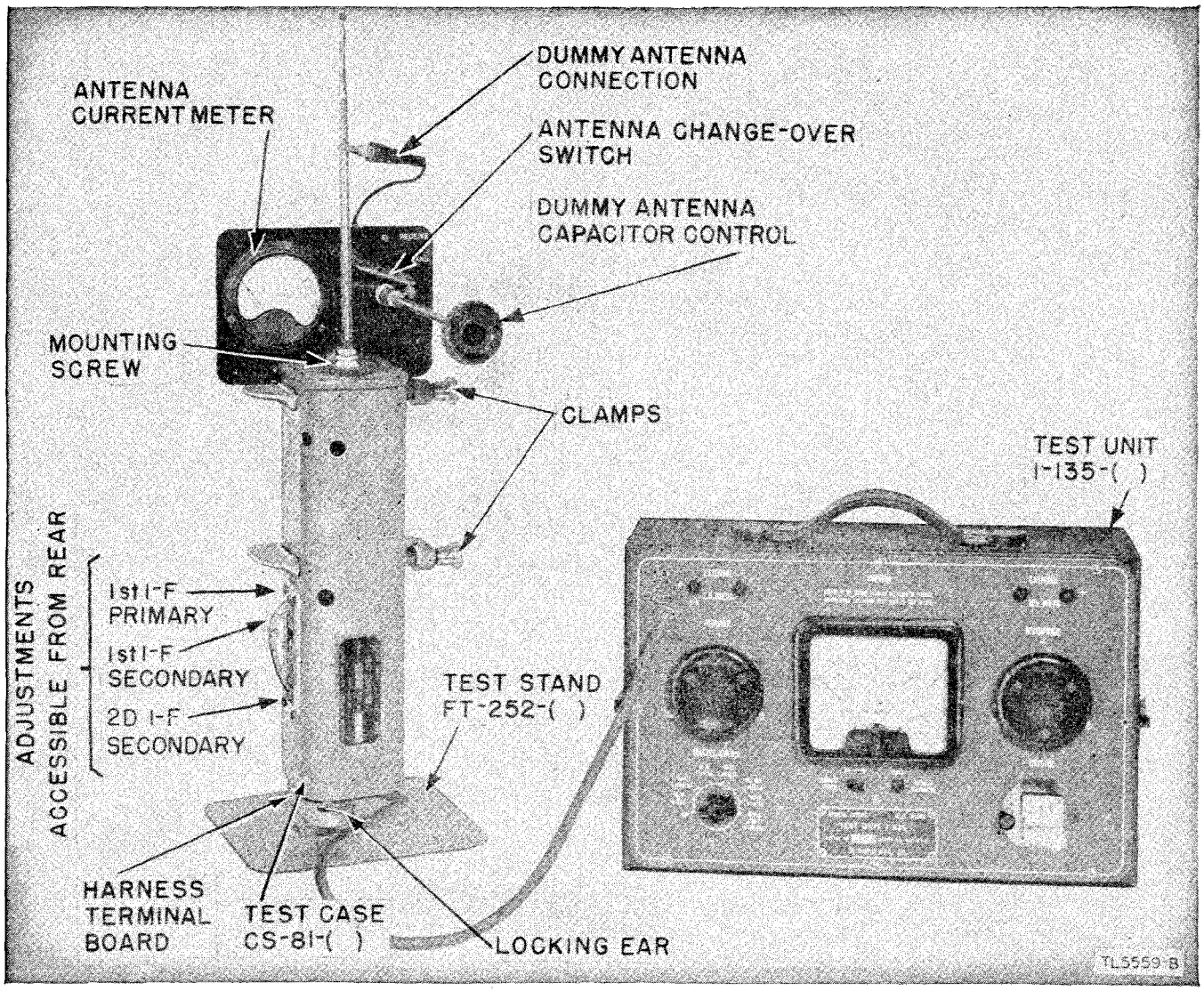

Figure 61. Test Equipment IE–17–( ), set up.

are not recommended because of their short life under these conditions.

e. The positions of the MASTER SWITCH of the test unit (fig. 62) are as follows:

(1) OFF, in which position the external and internal batteries of Test Unit I–135–( ) are disconnected from the test unit and the radio set chassis. The radio set and oscillator are in all other positions of the MASTER SWITCH.

(2) BA-37 O-3V. D. C., in which position the meter indicates the voltage of the external A battery or Battery BA–37.

(5) BA–38 0–60 MA. D. C., in which position the meter indicates the current drain of the external B battery or Battery BA–38.

(6) PWR. AMP. 0–15 MA. D. C., in which position the meter indicates the r-f power-amplifier plate current when the radio set is in the transmit position.

(7) OUTPUT 0–60 V. A. C., in which position the meter indicates the audio output voltage of the receiver circuit. (The meter is connected across the test unit earphone.)

(8) CRYSTAL ACTIVITY 0–1.5 MA. D. C.,

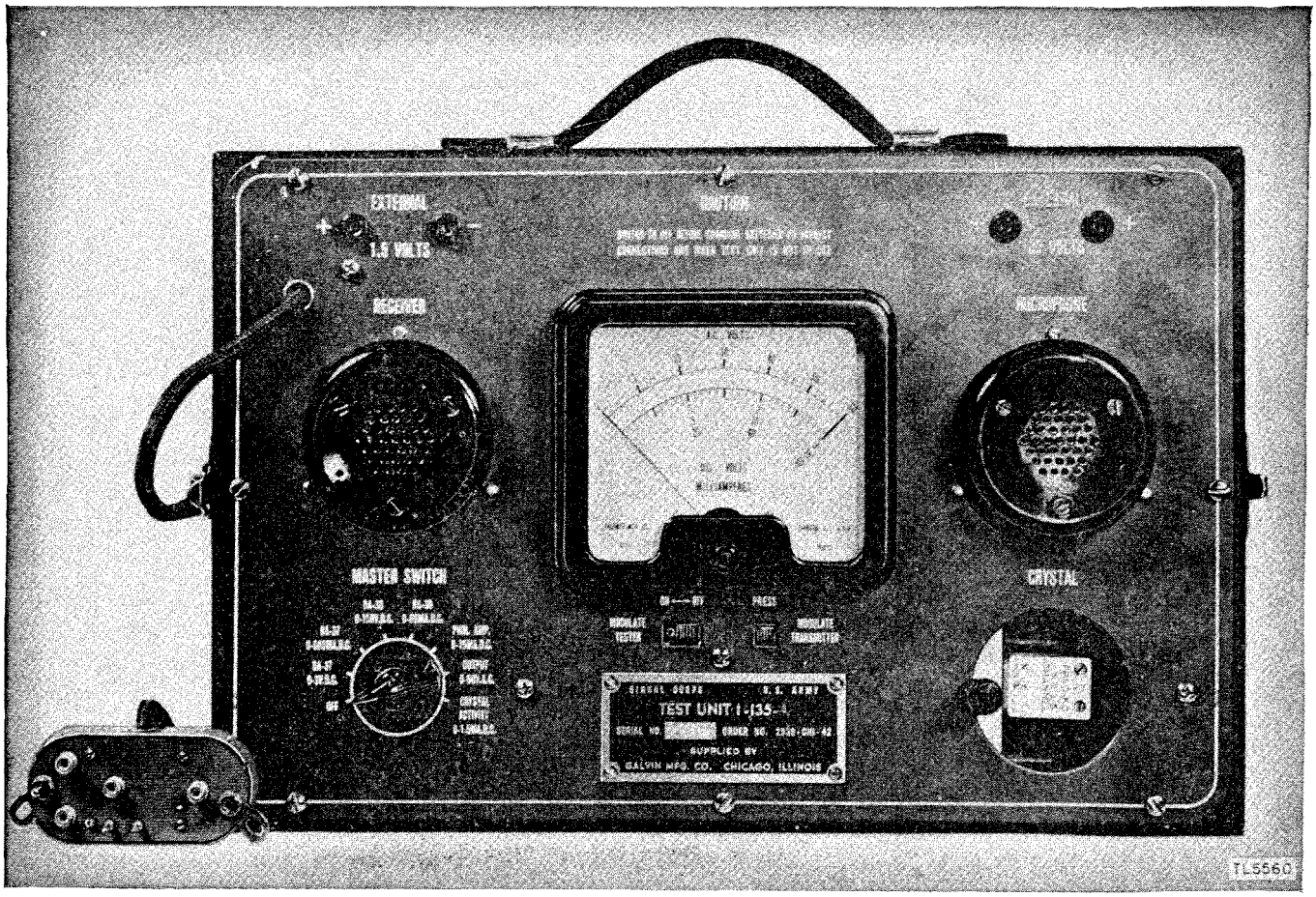

Figure 62. Test Unit I–135–( ).

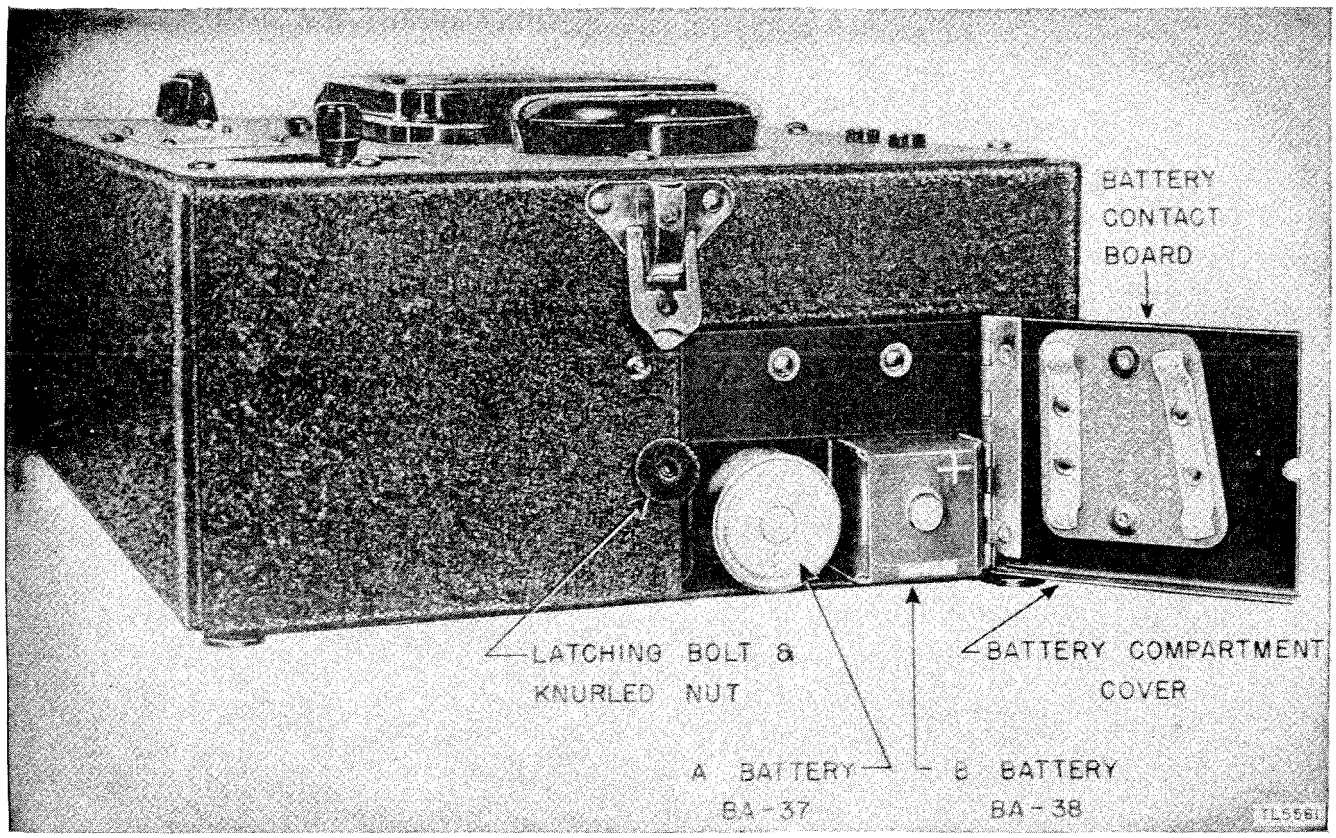

Figure 63. Test Unit I–135–( ), showing battery compartment.

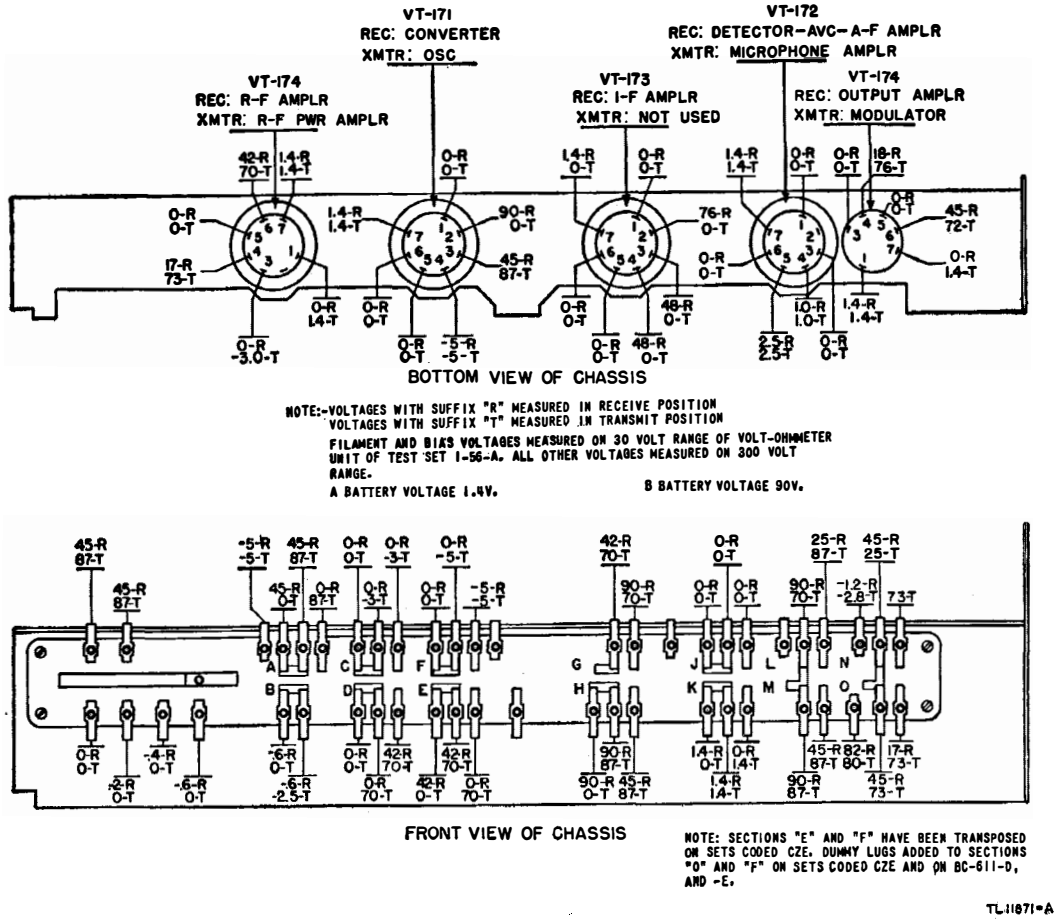

Figure 64. Radio Receiver and Transmitter BC-611-A through -E, voltage measurements.

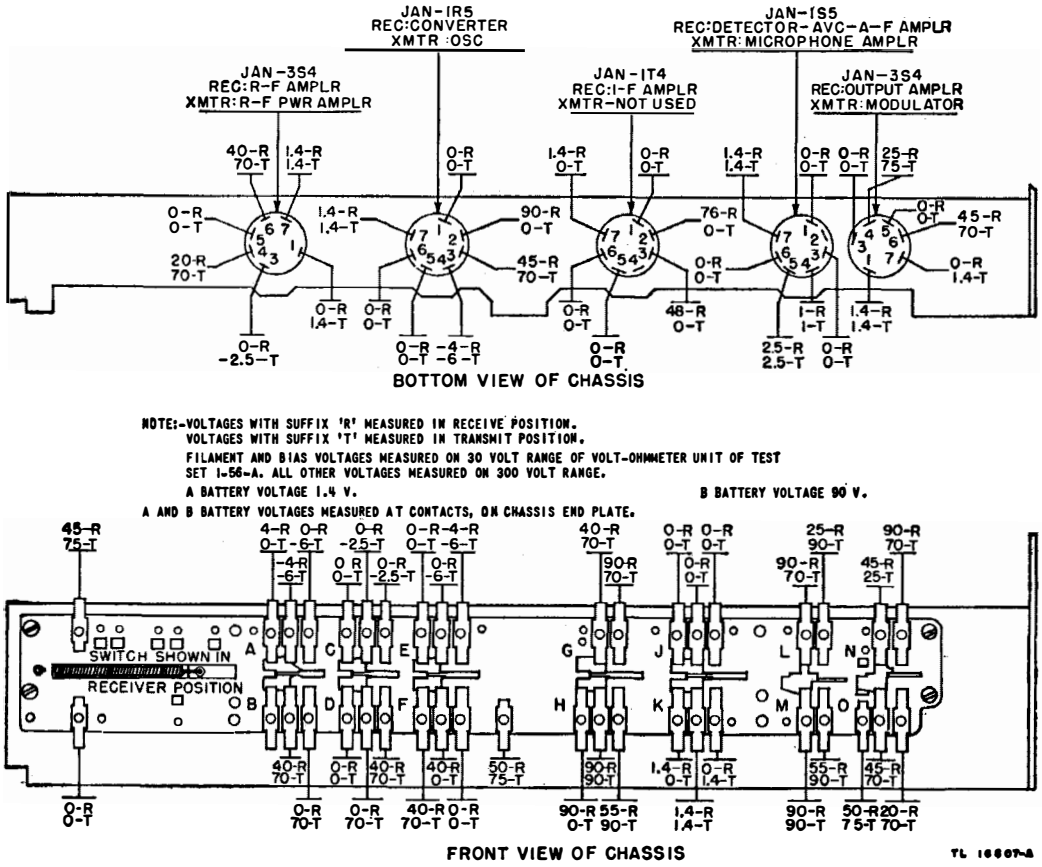

Figure 65. Radio Receiver and Transmitter BC-611-F, voltage measurements.

in which position the meter indicates the grid current of the crystal oscillator to show the condition of the crystal. The MODULATE TESTER switch must be OFF when crystal activity is being checked.

f. The switch marked MODULATE TESTER is used to modulate the r-f oscillator with a 1,000-cycle-per-second tone when the test unit is to be used for receiver alignment purposes.

g. The switch marked MODULATE TRANSMITTER applies a 1,000-cycle-per-second audio voltage across the microphone input circuit of the transmitter as a test of the modulation capability of the transmitter.

Note. The MODULATE TESTER switch must be ON and a crystal must be in place in the compartment socket when this test is made.

h. Test Unit I–135–( ) also contains an earphone and a microphone which are mounted in the front panel of the case. These are used to listen to the audio output of the receiver or to modulate the transmitter by speaking into the microphone.

83. Trouble-shooting Procedures

a. When trouble shooting take the following precautions:

(1) Do not check filament continuity with an ohmmeter unless the highest scale is used. Failure to observe this caution may result in burning out of filaments.

(2) Although low voltages are used in Radio Set SCR–536–(*), do not make careless voltage checks. Shorting voltages to ground when taking measurements causes damage to circuit elements and reduces battery life.

(3) Exercise great caution when removing tubes, as they break easily. Use a rod inserted through the metal tube in the center of the tube socket on the bottom of the chassis and gently force the tube out. Be sure to first remove the locking clip on top of the tube.

(4) Handle crystal holders carefully and do not remove the crystals from the holders.

(5) Never replace any tube or circuit element known to be faulty until the cause of failure of the damaged element has been determined and corrected. Instructions for replacing parts are given in paragraphs 88 to 98.

(6) When making voltage and resistance measurements on a set which has been moistureproofed and fungiproofed, use a sharp probe to make good contact, while causing as little damage to the protective coating as possible. Retouch any spots where varnish is removed.

b. The trouble-shooting charts (pars. 84 through 87) and the voltage charts (figs. 64 and 65) will assist in testing and trouble shooting. Signal tracing and signal substitution may be used to localize trouble that cannot be found by inspection and voltage and resistance checks.

c. The trouble-shooting chart in paragraph 84 is used by the operator to aid in sectionalizing trouble in Radio Set SCR–536–(*). The operator, if properly familiar with the normal operating indications, may take corrective steps within his authority, and report other faults to a qualified repairman. Most of the trouble shooting in this chart may be accomplished by inspection and replacement of circuit elements without making instrument checks.

d. The charts in paragraphs 85 and 86 are used by the repairman to assist in sectionalizing trouble in the receiver and transmitter circuits.

e. The chart in paragraph 87 will aid in localizing trouble in the receiver and transmitter circuits. In this chart, common troubles and their remedies are listed for quick reference.

84. Sectionalizing Trouble in Radio Set SCR–536–(*)

Symptoms	Probable trouble	Corrections
1. Click of on-off switch not heard when antenna is raised or lowered.	1. Broken switch or actuating parts.	1. Replace broken parts.
2. Set dead in both receive and transmit positions (no background noise or sidetone); usual click of switch heard when antenna is raised.	2. Weak batteries.	2. Insert fresh batteries with positive ends out.
	Dirty contact points.	Clean contact points on bottom cover, spring contacts at top of housing, and on the batteries.
	Improper or damaged tubes.	Inspect to insure that the proper tubes are correctly installed and that they are undamaged.
	Earphone jack.	Make certain that the PHONE jack is properly inserted.
	Defective earphone.	Check and replace earphone.
	Bad output amplifier-modulator tube V4, or amplifier tube V5, or defect in these circuits.	Check and replace tubes; check circuits.

Symptoms	Probable trouble	Corrections
	Faulty change-over switch.	Correct any improper change-over switch operation.
3. Background noise and sidetone heard, but no reception or transmission.	3. Antenna shorted. Defective or incorrect ANTENNA coil, TANK coil, on crystals.	3. Correct any shorted condition. Check and replace parts.
4. Background noise weak; excessive sidetone; no reception or transmission.	4. Bad r-f amplifier tube V1, or open circuit in r-f amplifier in transmit position.	4. Check and replace tube; check circuit.
5. Background noise weak; sidetone normal; no reception or transmission.	5. Bad converter tube V2, or open circuit in converter stage.	5. Check and replace tube; check circuit.

85. Sectionalizing Trouble in Receiver Circuit

Symptoms	Probable trouble	Corrections
1. No reception; transmitter circuit operative; background noise heard; sidetone in transmit position.	1. Bad i-f amplifier tube V3 or circuit. Defective or incorrect receiver crystal. Improper alignment and presetting. Defective circuit element; short or open circuit.	1. Check and replace tube; check circuit. Inspect and replace crystal. Align and preset the receiver. Use signal tracing or signal substitution; make voltage and resistance checks.
2. Background noise level low.	2. Weak batteries. Weak tubes. Defective earphone (also indicated by loss in sidetone level).	2. Check and replace batteries. Check and replace tubes. Check and replace earphone. Be sure the PHONE jack is correctly inserted.

86. Sectionalizing Trouble in Transmitter Circuit

Symptoms	Probable trouble	Corrections
1. No transmission; receiver circuit operative; sidetone and receiver background noise normal.	1. Incorrect or defective transmitter crystal. Improper presetting. Defective circuit element; short or open circuit.	1. Check and replace crystal. Preset the transmitter. Make instrument checks.
2. No sidetone, or sidetone level low.	2. Weak batteries. Defective earphone (also indicated by loss in receiver background noise). Defective microphone. Poor microphone amplifier tubes or modulator tubes.	2. Check and replace batteries. Check and replace earphone. Be sure the PHONE jack is correctly inserted. Check and replace microphone. Be sure the MIKE jack is correctly inserted. Check and replace tubes.
3. Circuit not converted when press-to-talk switch is depressed.	3. Broken press-to-talk switch.	3. Replace switch.

87. Localizing Trouble in Receiver and Transmitter Circuit

Symptoms	Probable trouble	Corrections
1. Excessive r-f amplifier plate current in the transmit position.	1. Poor crystal. Burned out converter tube. Capacitor C9 open. Oscillator not functioning. (If the r-f amplifier grid excitation is low, insufficient bias voltage will be developed across grid resistor of R6, and plate current will be excessive.) Improper r-f amplifier TANK COIL, or short-circuited turns in coil.	1. Replace crystal. Check and replace tube; check circuit. Shunt capacitor C9 with a good capacitor and replace if necessary. Check circuit. See the transmitter characteristics, paragraph 71. Replace with good coil of correct frequency.

Symptoms	Probable trouble	Corrections
	(Will show up in the inability to get a dip in the plate current reading of the r-f amplifier tube when tuning this stage.) Leaky or short-circuited coupling capacitor C9.	Test and replace capacitor.
2. No reception and transmission; oscillator does not function (improper reading obtained when d-c voltmeter is placed across R4). (See figs. 63 and 64.)	2. Weak crystal.	2. Check crystal as described in paragraph 81*e*(8). Replace if necessary.
	Low battery voltage.	Check batteries under load. Replace if low.
	Defective switching. (Moving blade of section A of the changeover switch must make contact with the switch lug connected to the transmitter crystal at the same time or before the moving blade of switch section M short circuits resistor R17. Otherwise, the energy pulse necessary to start crystal activity will not reach the crystal and the oscillator will not function. As a result of the high screen voltage and no bias, the oscillator tube will become paralyzed.)	Check switching. If necessary, move lug on switch section A connected to the transmitter crystal so that it does make contact at the same time or before switch section M short circuits resistor R17. Replace tube if necessary.
3. Audio oscillation in transmit position.	3. R-f amplifier tube inoperative. (Removes load offered to modulator tube. Plate load is then the high impedance of the modulation choke. Under this condition, sufficient coupling exists between the input of the audio amplifier and the output of the modulator to cause oscillation.)	3. Check r-f amplifier tube V1 for open filament, gas, or loss of vacuum due to a crack in the glass. A milky color near the exhaust tip of the tube indicates a cracked or gassy tube. Replace if necessary.
4. Oscillation or noise due to excessive regeneration. (A small amount of regeneration is permissible, as it increases the selectivity and sensitivity of the receiver.)	4. Coupling between circuit elements due to close spacing of parts on the chassis. (Trouble may become evident when tubes are changed, as tubes of the same type vary somewhat in gain characteristics.)	4. Change tubes. On BC–611–A through –E, reduce receiver sensitivity to a value which permits an allowable noise level. Bias resistors R25, R7, and R5, connected across oscillator grid-leak resistor R4 provide an adjustable bias arrangement. Move the lead connecting detector load resistor R14 to the bias point to a position one step up on the voltage divider to decrease sensitivity. This increases the bias on tubes V1, V2, and V3. The lead is normally grounded, but in sets of abnormal sensitivity will be found connected to one of the taps on the divider. Make the connection to the lowest point on this divider which provides a satisfactory noise level. Radio Set SCR–536–F has fixed bias.
5. Poor sensitivity.	5. Weak tubes or batteries.	5. Test tubes and batteries, making any necessary replacements.
	Circuit failures.	Check circuit for defective elements.
	Sensitivity adjustment incorrect.	Make adjustment of sensitivity control (see item 4 above). Reduce bias by connecting the lead closer to the ground end of the divider.
6. Loose or tight adjustment of antenna trimmer capacitor.	6. Incorrect or defective coil.	6. Check coil and replace if necessary.
7. Set noisy when tapped gently.	7. Loose connection.	7. Check sections of antenna rod, tension between batteries and their contacts. Inspect for poor connections. Check for tube with loose internal element. (Make checks by gently tapping at various places with the insulated handle of a small screw driver.)

Section XVI. REPAIRS

88. Replacement of Press-to-talk Switch

a. Remove the six screws holding the escutcheon plate around the press-to-talk switch. Set these screws aside; the same type screws must be used when the plate is replaced.

b. Remove the rubber cover of the press-to-talk switch. This cover is cemented down and must be carefully worked loose. Use a knife blade, taking care not to cut or tear the cover.

c. Separate the long and short levers which form the bridge of the switch and fold them back.

d. Remove the two screws holding the long and short lever assemblies in place and remove these parts.

e. Replace the parts in reverse order, taking care to put the assemblies in their proper places.

f. Cement the rubber cover in place using Permatex, and replace the escutcheon plate.

g. Test the switch by turning the set on and pressing the switch.

89. Chassis Removal

a. Unlatch the bottom cover and remove the batteries. Disconnect the microphone and earphone plugs from the terminal board on the end of the chassis by gently pulling them out. Plugs and jacks are color-coded with small spots of color, green for microphone and red for earphone. Remove the mounting screw in the top cover of the housing. Remove the top cover after loosening the carrying strap. Exert gentle pressure on the chassis with the thumbs until the lower end of the chassis can be firmly grasped through the bottom housing opening.

b. When inserting the chassis into the housing, the metal projections on the chassis must be aligned with the slotted guides on the inside of the housing. (See fig. 66.) Only slight pressure is necessary if the chassis is correctly inserted, if the guides are free of obstructions, and if the chassis projections are not bent out of line. *Do not force.* Check through the top cover opening to see that alignment is proper.

Note. If the wrong screws are used to hold the metal plate over the rubber cover of the press-to-talk switch, it is possible to block the guides on the inside of the housing making it impossible to remove or insert the chassis.

90. Replacement of Microphone

Remove the batteries and battery separator from the housing. Unscrew the microphone cover on the housing, and lift the unit out of the housing. Remove the screw which grounds one of the two leads

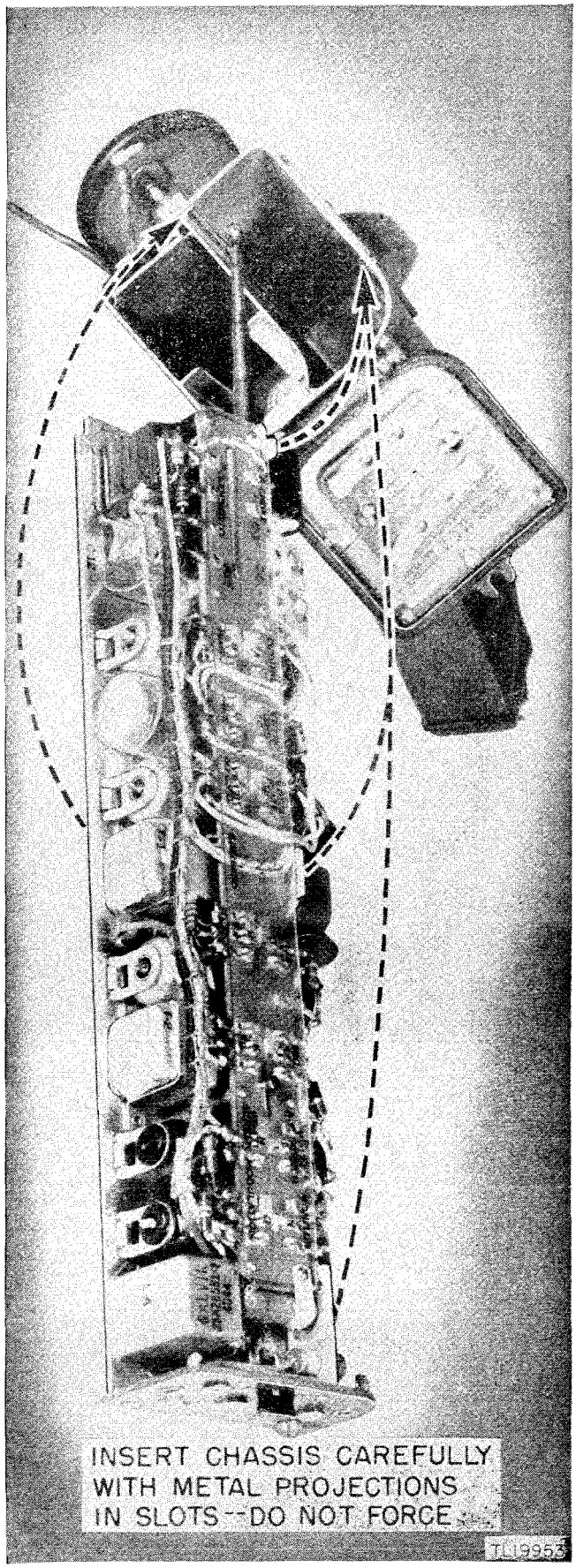

Figure 66. Guides on inside of housing.

to the housing in back of the microphone unit. Pull the other lead through the hole in the housing. Install a new microphone unit by connecting the leads and fitting the unit in place.

91. Replacement of Earphone

Replace the earphone unit in the same manner as the microphone.

92. Replacement of On-off Switch

To replace the antenna on-off switch, remove the a-f choke and the two tubular capacitors next to the switch. Remove the nut holding the switch to the chassis and then remove the wires to the switch. Remove the switch from the chassis. During replacement, take care to put the switch in the correct position. Test the switch by carefully lowering and raising the bottom antenna section.

Note. On sets procured on Order No. 26827-Phila-41-01, serial No. 15429 and up, the antenna clamp may be removed by loosening the screw holding the clamp to the polystyrene ANTENNA coil base. Remove the coil to reach the screw.

c. The antenna insulator is removed by unscrewing (counterclockwise) and sliding it over the antenna. Apply a thin coat of varnish to the threads of the new insulator before screwing it in place.

94. Replacement of Resistor-capacitor Cups

a. To remove a resistor-capacitor cup on the bottom of the chassis, first unsolder the wires from the tube socket and the cup. The cup is fastened to the tube socket by cement. Pry it loose from the socket using a screw driver or a knife. The cup will be broken in the process.

b. Each cup has a part number marked on it as well as a schematic drawing of the capacitor and

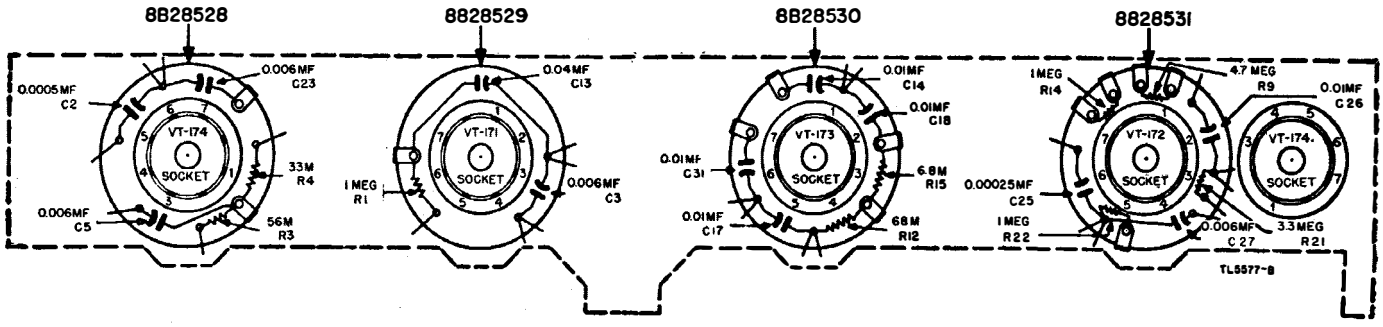

Figure 67. Resistor and capacitor cups, schematic diagram.

93. Replacement of Antenna

a. Remove the chassis from the housing and remove the screw which holds the antenna guide to the terminal board. Gently bend the terminal board away from the antenna guide so that the plug at the end of the guide disengages from the hole in the terminal board. Be very careful during this operation not to tear the terminal board loose from its fastenings. With the guide unfastened, withdraw the antenna rod from the metal clamp.

b. To replace the antenna rod, slip the antenna guide over the bottom section of the rod. Pass the antenna rod through the antenna guide ferrule and seat the ferrule at the top of the guide. Insert the tip of the antenna rod into the antenna clamp and push the rod through the clamp gently, until the top of the antenna guide comes in contact with the clamp. Orient the antenna guide so that the insulated actuator on the antenna rod engages the lever on the power switch. Very carefully bend the terminal board back slightly; just enough to permit the plug at the end of the guide to seat in the hole in the terminal board. Replace the fastening screw.

resistor connections. When replacing a cup, be sure that the new cup has the same part number as the old one. Because a great number of wires must be unsoldered, it will be found helpful to put on paper a simple description of each wire removed and the point to which it connects. Reference to the cup diagrams shown in figure 67 also will be found helpful. Scrape the old cement off the socket base before cementing the new cup in place. Place the new cup on the chassis so that the part number on the cup faces the back of the chassis (considering the press-to-talk switch side to be the front).

Caution: *When soldering connections to a new cup be careful not to apply too much heat. The cup may be damaged if this precaution is not observed.*

c. When necessary, conventional small resistors and mica capacitors may be used to replace the parts contained in the cups. Locate the parts carefully so that there is no interference when the antenna is raised and lowered and when the chassis is replaced. To prevent shorting, insulate the leads of the parts installed with spaghetti tubing. See figure 67 when replacing parts.

95. Replacement of Tubes

Lift the tube retainer bracket at the top of the tube and remove the shield, if there is one. Insert a narrow rod through the bottom center of the tube socket and gently force the tube out. A small, narrow-bladed screw driver will be found useful for this purpose. When replacing the tube, be sure it is the right type and that the base of the tube is so turned that the pins fit into the socket properly. Use the wide space between pins 1 and 7 of the tube as a guide to line the tube with the socket. These tubes are small and fragile and must be handled gently. It is impossible to insert the tubes incorrectly in the socket, but make sure the protruding wires and socket openings are properly lined up before using any pressure. The correct tube designations are marked on the chassis of the radio set. Tube base connections are shown in figure 68.

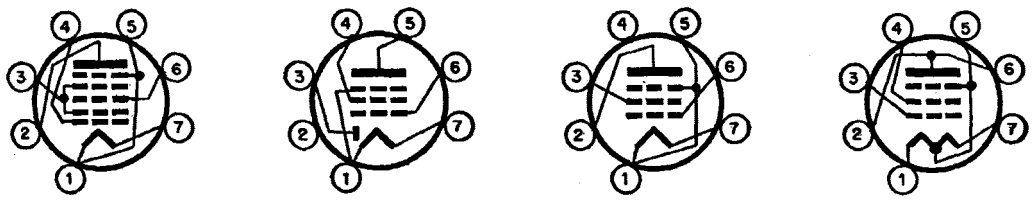

VT-171 JAN-1R5

PIN	ELEMENT
1	FILAMENT
2	PLATE
3	SCREEN GRID
4	OSC GRID
5	SUPPRESSOR
6	GRID
7	FILAMENT +

VT-172 JAN-1S5

PIN	ELEMENT
1	FILAMENT
2	NONE
3	DIODE PLATE
4	SCREEN GRID
5	PLATE
6	GRID
7	FILAMENT +

VT-173 JAN-1T4

PIN	ELEMENT
1	FILAMENT AND INT SHIELD
2	PLATE
3	SCREEN GRID
4	NONE
5	SUPPRESSOR
6	GRID
7	FILAMENT +

VT-174 JAN-3S4

PIN	ELEMENT
1	FILAMENT +
2	PLATE
3	GRID
4	SCREEN GRID
5	FILAMENT—
6	PLATE
7	FILAMENT +

TL 55708

Figure 68. Tube base connections.

96. Changing Coils and Crystals

a. Antenna Coil. Remove the plug-in ANTENNA coil by carefully lifting it out of its socket. In its place insert another coil of the desired frequency.

b. Tank Coil. To remove the TANK COIL, loosen the screw holding down the coil-retainer spring on top of the coil. Swing the spring free of the coil. Lift the coil out of the socket. When replacing with another coil of the desired frequency, carefully fit the coil over the two pins projecting up from the socket, so that the pins fit into the holes in the coil form and the coil adjustment shaft fits into the hole in the socket. Gently press the coil into the socket, replace the coil-retainer spring on top of the coil, and tighten the screw holding the spring.

c. Crystals. The crystals are mounted in plug-in type holders. To remove a crystal (crystal and holder), lift the clamp located on top of the crystal holder. This clamp pivots on a stud fastened to the chassis. Place a small screw driver between the crystal holder and the socket and gently pry the crystal holder up. Remove the other crystal in the same way. Select a transmitter and a receiver crystal of the desired frequency. (The frequency of the transmitter crystal will be the same as that of the coils, while the receiver crystal will be 455 kc higher in frequency.) Insert the receiver crystal holder in the crystal socket marked REC. Insert it so that the frequency printed on the metal side faces out and the arrow on the holder points in the same direction as the arrow on the socket. Place the transmitter crystal in the socket marked TRAN in exactly the same way. The printed metal side of the holder should show through the opening in the chassis.

97. Removal of Eyelets

As most of the parts are fastened to the chassis with eyelets, removal of the eyelets is necessary for the replacement of these parts. A simple and effective way to remove an eyelet is to place a drill point of a diameter larger than the eyelet in a vise with the tip end up. Place another drill point of a similar diameter in a brace. Put the eyelet to be removed over the drill point in the vise, then apply the brace to the other side of the rivet and drill it out. Drill out only enough material to remove the rolled edge of the eyelet. Take care not to drill through the chassis.

98. Replacement of I-F Transformer

Disconnect the transformer wires, and remove the clamps holding the transformer shield can to the chassis. Make a note of the transformer position so that the transformer wires can be put back in

WAR DEPARTMENT

UNSATISFACTORY EQUIPMENT REPORT

FOR	TECHNICAL SERVICE: Signal Corps MATÉRIEL		DATE: 1 Feb 45
FROM	ORGANIZATION: 175 Signal Repair Co.		STATION: APO 102
TO	NEXT SUPERIOR HEADQUARTERS: Supply Sec. Hq Fourth Army Sig Sv.	STATION: APO 110	TECHNICAL SERVICE: Signal Corps

COMPLETE MAJOR ITEM

NOMENCLATURE: Radio Transmitter BC-123-A	TYPE: Ground, vehicular		MODEL: A
MANUFACTURER: American Radio Corp	U. S. A. REG. No. Order No. 1234-Phila-45	SERIAL No.: 12345	DATE RECEIVED: 5 Jan 45
EQUIPMENT WITH WHICH USED (*if applicable*): Radio Set SCR-456-A Tank, Medium, M4			

DEFECTIVE COMPONENT—DESCRIPTION AND CAUSE OF TROUBLE

PART No. Sig C Stk. No. 3E47-2	TYPE: Capacitor C20: fixed; 1-mf; 500 vdcw	MANUFACTURER: American Radio Corp	DATE INSTALLED: when manufactured

DESCRIPTION OF FAILURE AND PROBABLE CAUSE (*If additional space is required, use back of form*)

Capacitor C20 shorts out due to humid operating conditions

DATE OF INITIAL TROUBLE	TOTAL TIME INSTALLED			TOTAL PERIOD OF OPERATION BEFORE FAILURE					
	YEARS	MONTHS	DAYS	YEARS	MONTHS	DAYS	HOURS	MILES	ROUNDS
15 Jan 45	-	-	-	0	0	5		-	-

BRIEF DESCRIPTION OF UNUSUAL SERVICE CONDITIONS AND ANY REMEDIAL ACTION TAKEN

Operation in tropics; heavy rainfall. Was replaced and set given moistureproofing and fungiproofing treatment, 20 Jan 45.

TRAINING OR SKILL OF USING PERSONNEL			RECOMMENDATIONS (*If additional space is required, use back of form*)
POOR	FAIR	GOOD X	Substitute capacitor designed for tropical operation

ORIGINATING OFFICER

TYPED NAME, GRADE, AND ORGANIZATION: E.A. WILSON, 1st Lt., Sig C. 175 Sig Repair Co.	SIGNATURE: E.A. Wilson

FIRST ENDORSEMENT

TO CHIEF	TECHNICAL SERVICE	OFFICE	
NAME, GRADE, AND STATION		STATION	DATE

Instructions

1. It is imperative that the chief of technical service concerned be advised at the earliest practical moment of any constructional, design, or operational defect in matériel. This form is designed to facilitate such reports and to provide a uniform method of submitting the required data.
2. This form will be used for reporting manufacturing, design, or operational defects in matériel, petroleum fuels, lubricants, and preserving materials with a view to improving and correcting such defects, and for use in recommending modifications of matériel.
3. This form will not be used for reporting failures, isolated material defects or malfunctions of matériel resulting from fair-wear-and-tear or accidental damage nor for the replacement, repair or the issue of parts and equipment. It does not replace currently authorized operational or performance records.
4. Reports of malfunctions and accidents involving ammunition will continue to be submitted as directed in the manner described in AR 750-10 (change No. 3).
5. It will not be practicable or desirable in all cases to fill all blank spaces of the report. However, the report should be as complete as possible in order to expedite necessary corrective action. Additional pertinent information not provided for in the blank spaces should be submitted as inclosures to the form. Photographs, sketches, or other illustrative material are highly desirable.
6. When cases arise where it is necessary to communicate with a chief of service in order to assure safety to personnel, more expeditious means of communication are authorized. This form should be used to confirm reports made by more expeditious means.
7. This form will be made out in triplicate by using or service organization. Two copies will be forwarded direct to the technical service; one copy will be forwarded through command channels.
8. Necessity for using this form will be determined by the using or service troops.

W. D., A. G. O. Form No. 468
30 August 1944

This form supersedes W. D., A. G. O. Form No. 468, 1 December 1943, which may be used until existing stocks are exhausted.

TL19589

U. S. GOVERNMENT PRINTING OFFICE 16—41546-1

Figure 69. WD AGO Form 468 with sample entries.

their original position, otherwise, oscillation may result. Also be certain that the new transformer is correctly installed, so that the tuning adjustments can be reached through the openings in the test housing when aligning the set. Make sure the i-f unit clamps are not bent so that they come in contact with the switch, causing a short circuit.

99. Unsatisfactory Equipment Report

a. When trouble in equipment used by Army Ground Forces or Army Service Forces occurs more often than repair personnel feel is normal, War Department Unsatisfactory Equipment Report, WD AGO Form 468 should be filled out and forwarded through channels to the Office of the Chief Signal Officer, Washington 25, D. C.

b. When trouble in equipment used by Army Service Forces occurs more often than repair personnel feel is normal, Army Air Forces Form 54 should be filled out and forwarded through channels.

c. If either form is not available, prepare the data according to the sample form reproduced in figure 69.

Section XVII. ALIGNMENT AND ADJUSTMENT

100. General

The i-f transformers must be properly aligned before Radio Set SCR-536-(*) can be preset. (See sec. XVIII.) It is *not* necessary to realign the i-f transformers when Radio Set SCR-536-(*) is preset to a different frequency, unless the i-f transformers have become misaligned. A signal generator connected to the signal grid of converter tube V2 may be used with Test Equipment IE-15-A (par. 77) for aligning the i-f transformers, or the oscillator in Test Unit I-135—( ) of Test Equipment IE-17-( ) (par. 81) may be used.

101. I-F Alignment Using Signal Generator

a. Setting Up Equipment. (1) Remove the chassis from the radio set housing. Remove the plate circuit jumper from the terminal strip at the end of the chassis. Do not misplace the jumper; it must be replaced after alignment.

(2) Fasten the top cover of the housing to the chassis with the mounting screw. Place the chassis in Test Stand FT-252-( ) as shown in figure 57, so that the upper clamp of the test stand grips the top cover.

(3) Attach the harness terminal board of the test set to the terminal board of the chassis, so that the two small pins on the harness terminal board fit into the plate current meter jacks, and so that the two locking pins (one on each end of the terminal board) fit into the holes provided for them. Lock the two terminal boards together by a sideward movement of the levers (locking ears) attached to the locking pins.

(4) Connect the four leads of the harness (marked A+, A—, B+, and B—) to the proper terminals of the plate and filament supply (Battery BA-40, or equivalent).

(5) Connect the two leads marked VT-174 PLATE MA to the 15-milliampere meter, or short them together and insulate them with a piece of tape. Connect the two leads marked TOTAL B MA to a 50-milliampere meter, or short them together and insulate them with tape.

(6) Connect the two unmarked leads to the 50-volt a-c range of the selective analyzer unit of Test Set I-56-( ).

(7) Connect the ground lead of the signal generator to Test Stand FT-252-( ).

(8) Connect a 0.05-mf capacitor in series with the output lead of the signal generator, and connect the other end of the capacitor to pin No. 6 of tube V2.

(9) Set the signal generator frequency accurately to 455 kc, using Frequency Meter Set SCR-211-( ). The signal generator should be modulated 30 percent by a 400- to 1,000-cycle-per-second tone.

(10) Adjust the signal generator output control until a 10-volt reading is obtained on the output meter connected to the receiver. Considerable generator output will be required when the set is badly out of alignment.

b. Adjustments (figs. 7 and 13). (1) Adjust the second i-f transformer secondary for maximum audio output as indicated on the meter. Do not grasp the test stand during i-f alignment. Reduce the generator output as the audio output increases above 10 volts to prevent overloading the receiver.

(2) On Radio Receiver and Transmitter BC-611-F only, adjust the primary of the second i-f transformer.

(3) Peak the secondary of the first i-f transformer.

(4) Peak the primary of the first i-f transformer.

(5) Repeat all adjustments carefully for maximum output.

102. I-F Alignment Using Test Unit I–135–( )

a. Setting Up Equipment. (1) Remove the transmitter crystal. Check to see that the proper receiver crystal and the proper coils are inserted. Place the chassis in Test Case CS–81–( ). The chassis must be inserted through the bottom of the housing, as is done when inserting the chassis into its own housing. It should not be necessary to force the chassis. If it is, withdraw the chassis and check to see that no parts are catching on the housing and that the chassis has not jumped the guides. Slip the top cover over the antenna rod and fasten the chassis to it with the mounting screw. The chassis then will be held securely in the housing. Remove the plate current meter jumper from the terminal board at the end of the chassis. Do not misplace the jumper. It must be replaced after alignment.

(2) Attach the terminal board of test unit harness to the terminal board of the chassis.

(3) Clamp Test Case CS–81–( ) in Test Stand FT–252–( ) with the antenna end up and the housing in such position that the change-over switch is opposite the left side of the operator, as he faces the stand. (See fig. 61.) The upper clamp should hold the housing at the edge of the top cover. The clamps must not be tightened too much as the pressure may crack the housing.

(4) Make certain that the MASTER SWITCH of Test Unit I–135–( ) is in the OFF position. Place the transmitter crystal in the crystal socket in the front panel compartment of the test unit. (See fig. 62.) Be sure the crystal is of the same frequency as the coils and transmitter crystal in the radio set, and that its frequency is 455 kc *less* than that of the receiver crystal in the radio set. Connect external 1.5-volt and 90-volt heavy duty batteries to the battery terminals marked EXTERNAL 1.5 VOLTS and EXTERNAL 105 VOLTS on the front of Test Unit I-135—( ).

b. Adjustments (figs. 7 and 13). (1) Place the MASTER SWITCH of the test unit in the OUTPUT 60 V. A. C. position.

(2) Switch the MODULATE TESTER switch to ON.

(3) The slide cover of the crystal compartment of the test unit acts as a radiation control preventing the signal from radiating when closed and allowing maximum radiation when open. If no readable audio voltage can be obtained on the meter of the test unit, make sure that a maximum r-f signal is being radiated. It may be necessary to connect a short length of wire to the R.F. OUTPUT terminal of the test unit and place the wire close to the receiver antenna.

Note. Test Unit I–135–A does not have an R. F. OUTPUT terminal.
The instructions furnished with the unit explain how to make this connection.

If it is impossible to obtain a readable output (since the receiver circuit is not preset), the i-f transformer adjustments may be accomplished using a signal generator set for a 455-kc output frequency.

(4) Adjust the second i-f transformer secondary for maximum output as indicated on the meter of the test unit.

(5) On Radio Receiver and Transmitter BC–611–F only, adjust the primary of the second i-f transformer.

(6) Adjust the secondary of the first i-f transformer.

(7) Adjust the primary of the first i-f transformer. Make all adjustments for peak output meter reading. When making adjustments, loosen the signal coupling to the receiver antenna so that the maximum audio output reading of the meter is not over 10 volts. This is necessary to prevent overloading the receiver and consequent poor alignment. The adjustments must be performed carefully for good results.

(8) Repeat all adjustments. After alignment, the receiver and transmitter circuits may be preset as described in section XVIII.

103. Minimum Test Requirements for Radio Receiver and Transmitter BC–611–(*)

Test data on sensitivity, selectivity, image rejection, audio output, and various other performance characteristics are contained in paragraphs 114, 115, and 116.

Section XVIII. PRESETTING

104. General

To cover the authorized range in frequencies from 3.5 to 6.0 megacycles, matched sets of ANTENNA coils, TANK COILS, and crystals are available. Each coil is marked with its frequency and part number so that errors of coil selection will be minimized.

a. Obtain coil and crystal equipment of the desired frequency.

b. Unlatch the bottom cover of the housing and

remove the batteries. Place them aside for test.

c. Disconnect the microphone and earphone plugs from the terminal board on the end of the chassis.

d. Remove the screw in the top cover of the housing and remove the chassis.

e. Remove the ANTENNA coil, TANK COIL, and both crystals, and replace them with units of the desired frequency.

105. Setting Up Test Equipment IE–15–A

(fig. 56)

a. Connect the four leads of the harness (marked A+, A—, B+, and B—) to their proper terminals on the plate and filament supply (Battery BA–40 or equivalent). Connect the two leads marked VT–174 PLATE MA to the 15-milliampere meter; connect the two leads marked TOTAL B MA to the 50-milliampere meter; and connect the two unmarked leads to the 50-volt a-c range of the selective analyzer unit of Test Set I–56–( ). Connect the earphone to the terminals marked G and P on the junction box attached to the harness. Connect the earphone lead, which is attached to the braided shield, to the G (ground) terminal.

b. Put the chassis in Test Case CS–81–( ).

c. Attach the terminal board of the harness to the terminal board of the chassis.

d. Clamp Test Case CS–81–( ) in Test Stand FT–252–( ).

e. The signal generator should be modulated 30 percent by a 400- to 1,000-cycle-per-second tone. The signal generator frequency must be checked with an accurate frequency meter, such as Frequency Meter Set SCR–211–( ).

106. Presetting Receiver With Test Equipment IE–15–A

Set up the equipment as described in paragraph 105 and set the signal generator to the carrier frequency. Turn on the radio set by extending the antenna rod to its full length. Do not press the press-to-talk switch on the test case during the receiver presetting adjustments. Connect the ground lead of the r-f signal generator to the test stand, but leave the output lead of the signal generator unconnected. The r-f input to the receiver will then be the pick-up on the antenna. Adjust the generator output for a reading of approximately 10 volts on the 50-volt a-c range of the output meter. If the receiver is badly out of alignment it may be impossible to get this output reading or any at all; in such a case follow the alignment procedure in section XVII. Grasp the test case with one hand during the following adjustments. (See figs. 70 and 71.)

a. With the insulated screw driver, turn the receiver antenna adjustment screw clockwise. Notice the effect of this adjustment on the output meter reading. If the meter reading increases, continue to tighten the screw until a maximum reading is obtained. If reading decreases, turn the screw counterclockwise until a maximum reading is obtained. Be careful not to force the screw, because the threaded base will be stripped. If a maximum point is not reached between the limits of the screw adjustment, replace the ANTENNA coil.

Note. Be sure that the r-f signal is not strong enough to cause overloading of the receiver. If this condition exists, adjustment of the receiver antenna adjustment screw will have little or no effect on the output reading. Best results will be obtained if the r-f output from the signal generator is adjusted so that the output meter reading does not exceed 10 volts, although satisfactory results may be obtained with the readings up to 20 volts.

b. Using the insulated screw driver, turn the TANK COIL adjustment screw for maximum output, using the same method as in subparagraph *a* above.

Note. The TANK COIL adjustment screw is made of bakelite and fits into a threaded powdered-iron core. Adjusting the screw changes the position of the core in the coil. If the screw is turned too far clockwise, the threads in the core will be stripped. If the maximum output is not obtained within the limits, of adjustment, replace the TANK COIL.

107. Presetting Transmitter With Test Equipment IE–15–A

Set up the equipment as described in paragraph 105. The signal generator is not used. Grasp the test case and operate the press-to-talk switch with one hand during the following presetting operations. (See fig. 72.)

a. Using the small screw driver, adjust the transmitter tank adjustment screw for *minimum* current reading on the 15-milliampere meter. The normal reading is approximately 7 milliamperes. Release the press-to-talk switch.

b. Telescope the upper three sections of the antenna rod, leaving only the bottom section fully extended from the housing. Clip the dummy antenna connection to the upper part of the antenna rod. Set the antenna changeover switch on the panel of Test Stand FT–252–( ) to the TRANS. position.

c. Connect the microphone provided with the test set to the M and G terminals of the test harness. Connect the braided lead to the G terminal.

d. Grasp the test case and depress the press-to-talk switch. Using the insulated shaft extension, adjust the dummy antenna capacitor control for

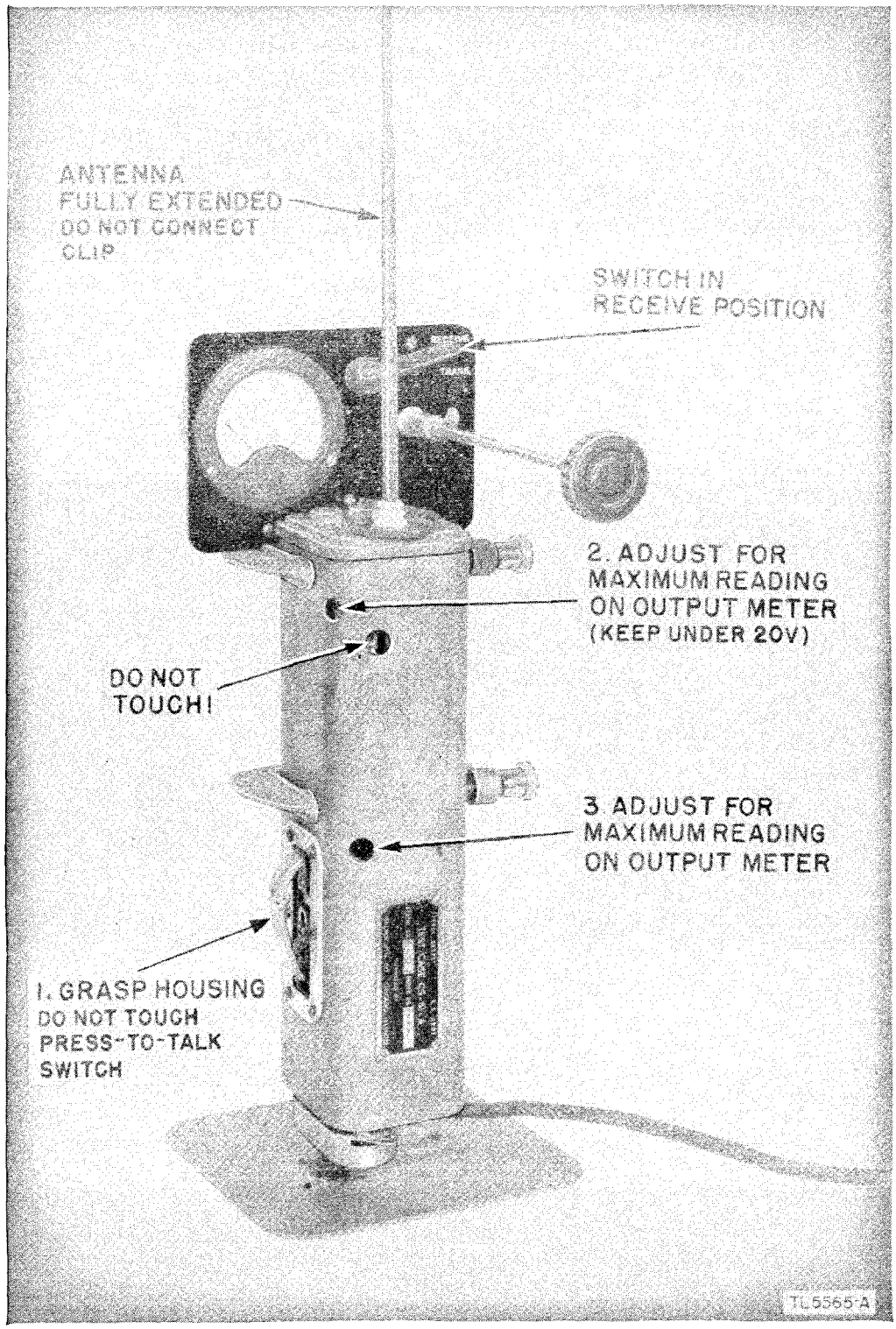

Figure 70. Radio Receiver and Transmitters BC-611-A through -E, receiver presetting adjustments.

minimum current reading on the 15-milliampere meter. The reading should be approximately 7 milliamperes. This adjustment of the dummy antenna capacitor for minimum power-amplifier plate current is necessary to compensate for the change in antenna capacitance due to telescoping of the upper three sections of the antenna rod. Observe the reading on the antenna current meter on Test Stand FT-252-( ). It should be from 15 to 24 milliamperes, representing the unmodulated antenna current.

e. Modulate the transmitter by whistling a steady note into the microphone. Watch the antenna current meter on the stand. It will be found that the meter reading increases. Keep whistling until the

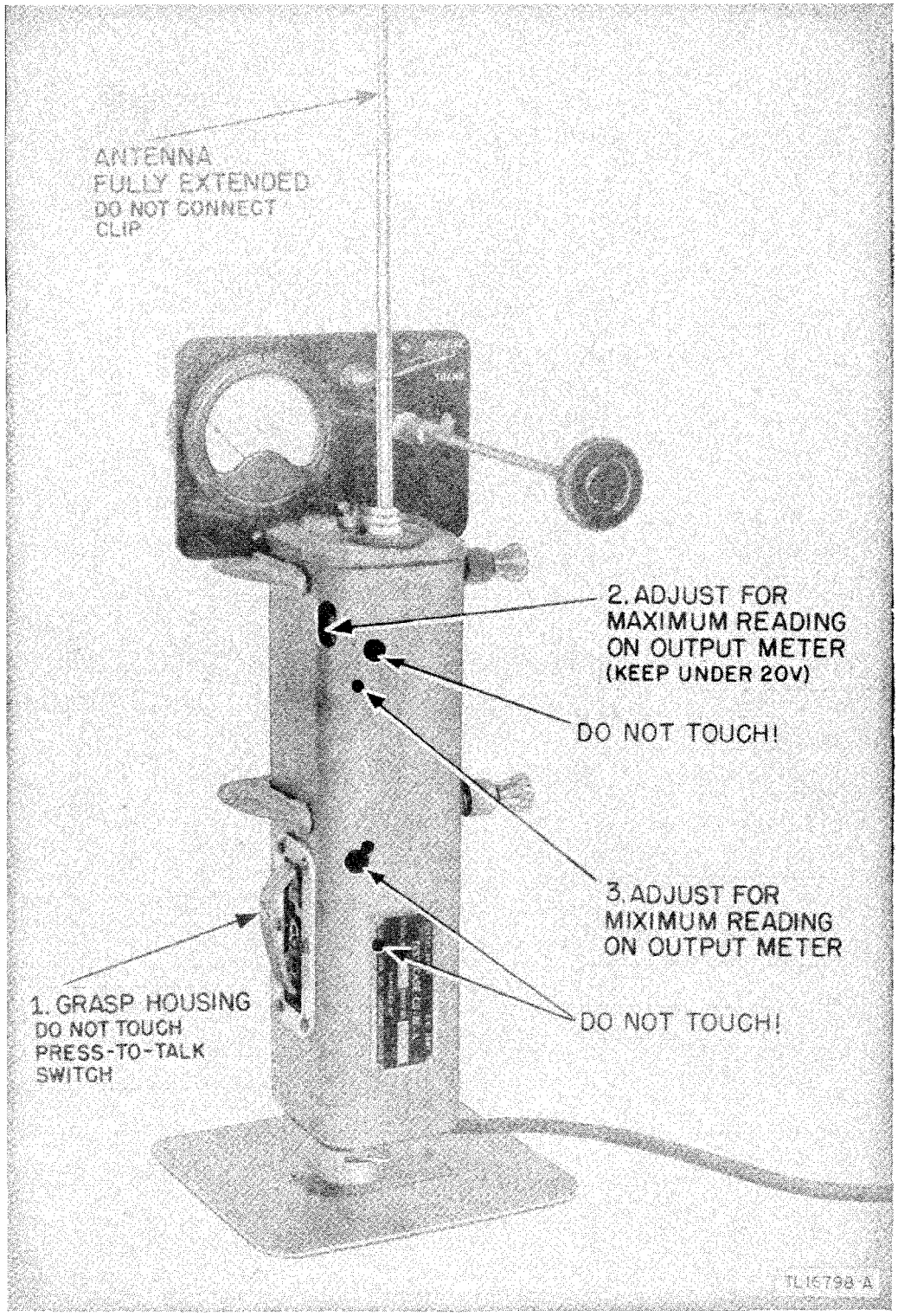

Figure 71. Radio Receiver and Transmitter BC-611-F, receiver presetting adjustments.

pointer on the meter reaches its highest position, then note the reading. Be sure to whistle loudly enough to cause the meter reading to rise. The meter reading should increase 15 to 20 percent over the reading obtained when not whistling into the microphone. For example, assume that the current when not whistling is 20 milliamperes and when whistling is 24 milliamperes. The increase in current is then 4 milliamperes. The percentage increase will be: $4/20 \times 100 = 20$ percent.

If less than 15 percent increase is obtained, check the crystal for activity; and also check the modulator, r-f amplifier, and oscillator tubes. Be sure that the battery voltage under operating conditions is at least 75 volts.

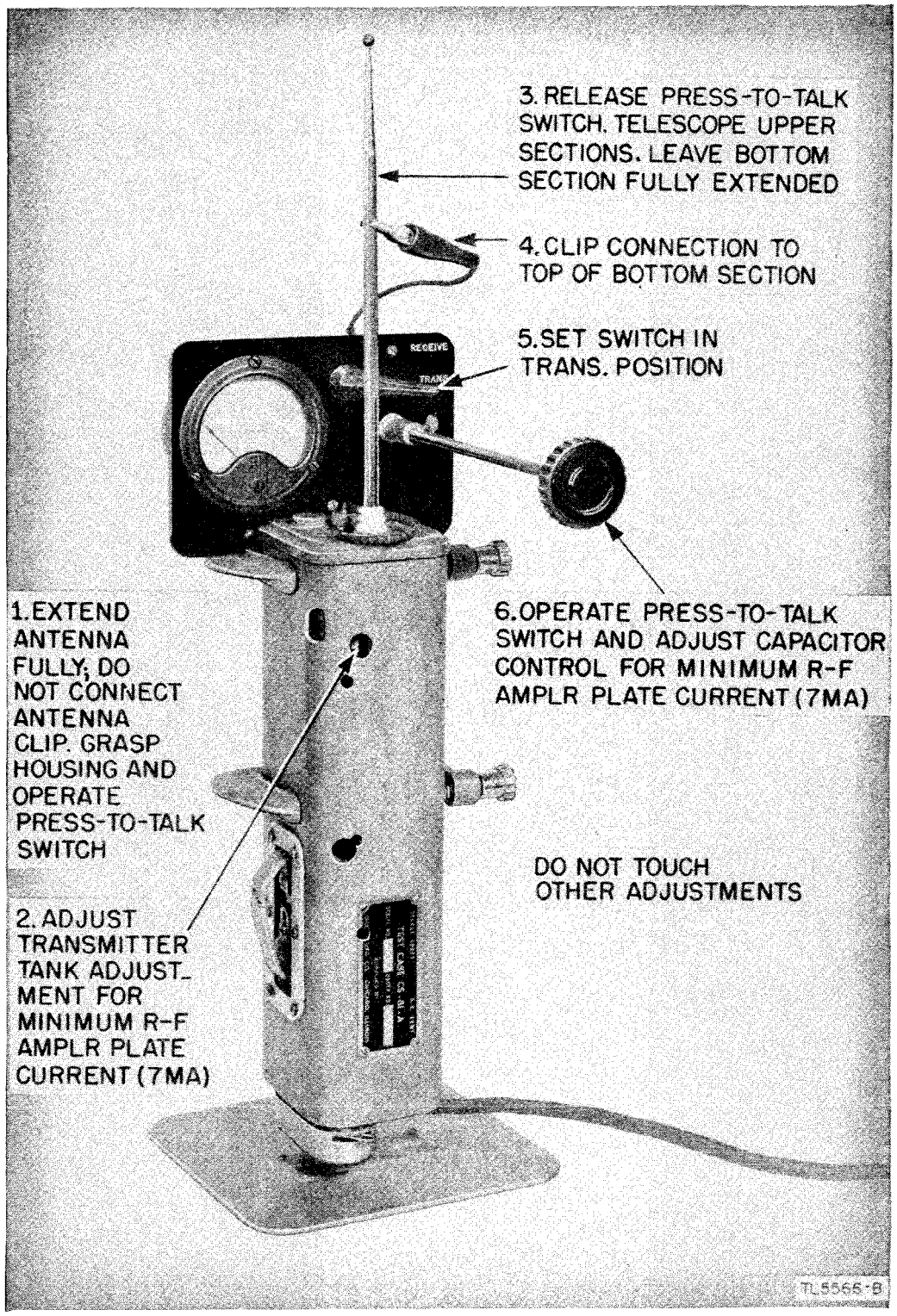

Figure 72. Radio Receiver and Transmitter BC-611-A through -E, transmitter presetting adjustments.

108. Checking for Image Frequency

When using the signal generator during presetting, be sure that the generator frequency is the same as the frequency to be received (carrier frequency); and not the *image frequency,* which is 910 kc higher than the carrier frequency. For example, a set tuned for proper operation at 5,500 kc will have an image response at 6,410 kc. In checking for proper receiver tuning, use a signal generator which has a calibrated output, and proceed as follows:

a. Set the generator to the carrier frequency. Note the signal generator output necessary for a

10-volt reading on the output meter connected to the receiver.

b. Set the signal generator to a frequency 910 kc above the carrier frequency.

c. Increase the signal generator output setting for 1,000 times the output used in *a* above. A signal should now be heard. Rotate the frequency dial *slightly* for a maximum signal indication on the output meter.

d. Adjust the generator output setting so that the output meter indicates exactly 10 volts. Note the new generator output setting. The signal generator output should now be at least 150 times the output found in *a* above. If no signal is heard at the image frequency, the receiver is not correctly aligned and preset, and the set should be retuned.

109. Using Radio Set SCR–536–(*) as Signal Generator

If no signal generator is available, one Radio Set SCR–536–(*) may be tuned by using another Radio Set SCR–536–(*) which operates at the same frequency. If a radio set is available which is not of the correct carrier frequency, it can be made to operate at the correct frequency by inserting the correct transmitter crystal and the proper ANTENNA coil and TANK COIL.

a. Converting Set to Signal Generator. To convert the set to a signal generator, proceed as follows:

(1) Remove the chassis from the housing of the set.

(2) Place the set in the test housing and connect the test harness as described in paragraph 102.

(3) With the antenna rod fully extended, grasp the test case and put the set in the transmit position. Using a small screw driver, adjust the transmitter tank adjustment screw for minimum reading on the plate current meter.

(4) Disconnect the harness from the chassis and remove the chassis from the test housing. Replace the plate current meter jumper.

(5) Put the set back into its own housing and close the cover.

(6) Put the set in the transmit position and place a buzzer near the microphone. The set is then ready for use as a modulated signal generator.

(7) If a buzzer is not available, self-modulate the carrier by converting the audio amplifier in the set to an audio oscillator. Place a 100-mmf capacitor between the microphone plug and the plate meter jack on the terminal board of the chassis. This capacitor will provide enough feedback to cause the audio amplifier to oscillate. When the radio set is put into the transmit position, an audio note will be heard in the earphone of the unit. A signal is now radiated, modulated by this audio tone.

(8) A special capacitor designed for self-modulation ((7) above) is supplied with Test Equipment IE–15–A. (See figs. 73, 74, and 75.) To simplify connections, one lead of the capacitor is tipped with a spade lug and the other lead is tipped with a plate current meter jumper. The spade lug has a small hole in it for the microphone plug. Place the spade lug of the capacitor lead between the microphone jack and the microphone plug. Remove the plate current meter jumper and replace it with the jumper attached to the other capacitor lead. Replace the batteries and place the capacitor into the space between the housing wall and the B battery spacer and then close the bottom cover. Check the set to see that it is oscillating by operating the press-to-talk switch and listening for an audio tone. The set is then ready for use as a modulated signal generator.

b. Presetting Procedure. (1) Remove the chassis from the housing of the set to be preset and insert the correct crystals and coils.

(2) Put the chassis into the test housing (par. 102) and attach the test harness. *Extend the antenna to its full length. Do not connect the dummy antenna.*

(3) With a piece of twine or wire, tie down the press-to-talk switch of the set being used as the signal generator. Extend the antenna of the signal generator set, and place the set about 20 feet away from the radio set to be preset.

(4) With the set in the test case in the receive position, adjust the antenna adjustment for maximum audio output. If the signal picked up is too strong (which will show up in a noncritical adjustment of the receiver antenna adjustment screw), the signal radiated from the set used as the signal generator can be reduced by telescoping sections of the antenna rod. (Be careful not to turn off the set.) If this does not reduce the signal sufficiently, place the set used as the signal generator on the ground with its antenna in a horizontal position and pointing way from the set being adjusted.

(5) Next adjust the TANK COIL screw for maximum audio output. The receiver is now properly preset. Turn off the signal generator set.

(6) To preset the transmitter, place the set in the transmit position and adjust the transmitter tank adjustment screw for minimum plate current.

(7) Collapse the upper three sections of the an-

tenna rod and connect the dummy antenna to the top of the rod. Connect the microphone to the M and G terminals of the junction box. Then adjust the dummy antenna capacitor control for minimum plate current. Whistle into the microphone and check the antenna current increase due to modulation as described in paragraph 107.

110. Crystal Activity Test

Place the crystal in the crystal socket of Test Unit I–135–( ). Place the MODULATE TESTER switch in the OFF position, and turn the MASTER SWITCH to the CRYSTAL ACTIVITY position. The meter should read between 0.3 and 0.8 milliamperes. If it reads less than 0.3 milliamperes, the

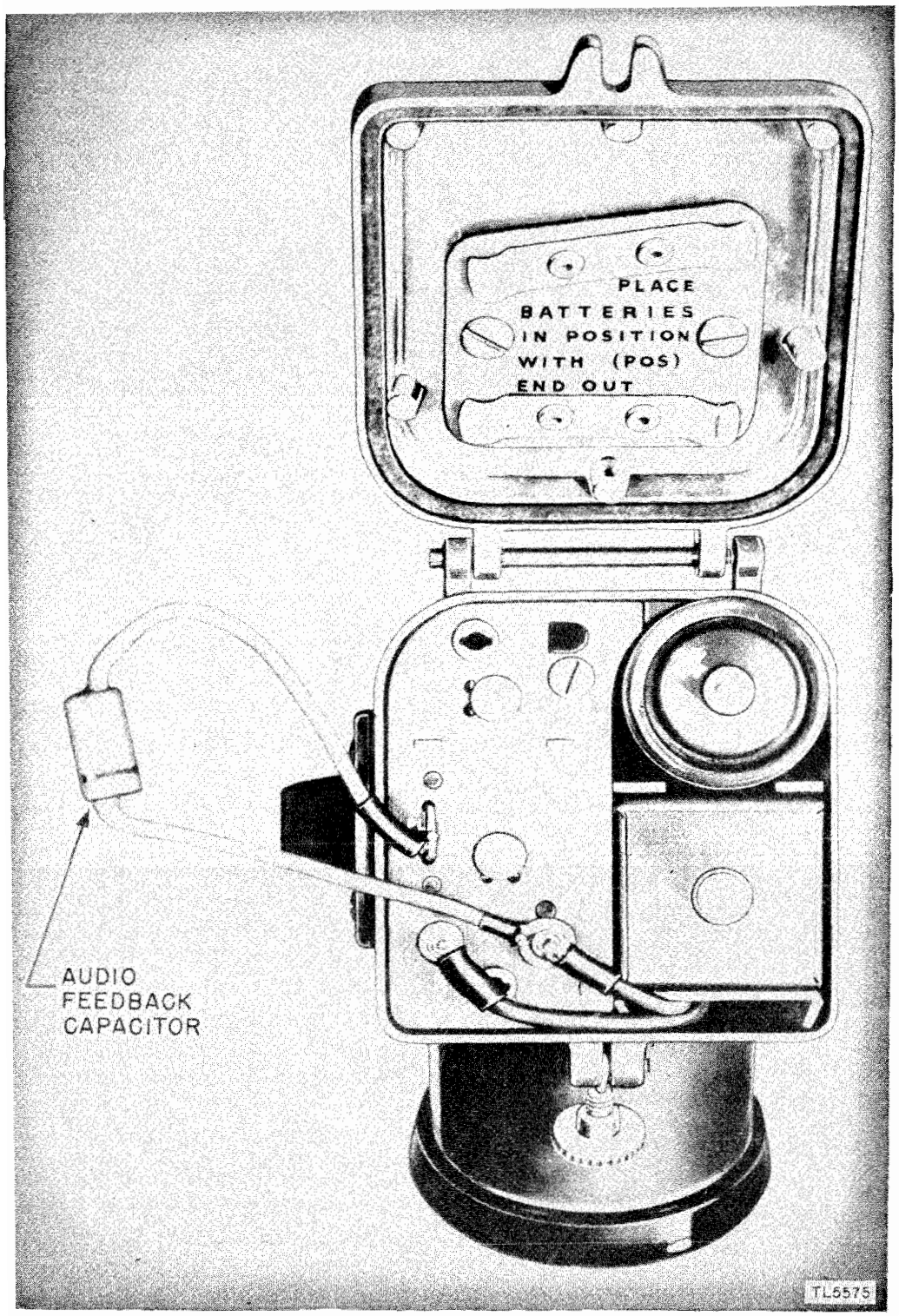

Figure 73. Connections for self-modulation.

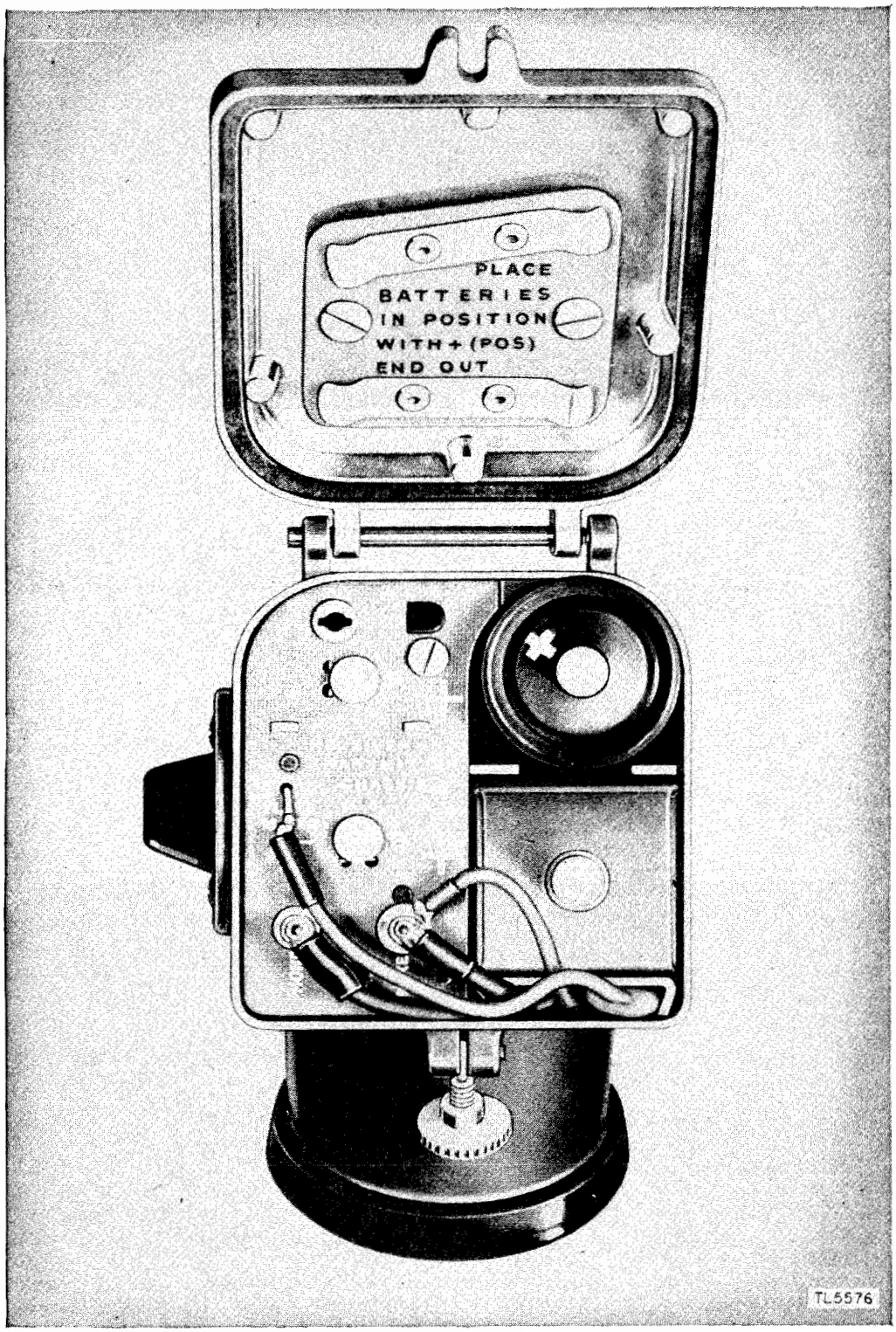

Figure 74. Placement of audio feedback capacitor.

crystal is defective and must be replaced. Before replacing a crystal for poor activity, be sure that the external battery voltages applied to Test Unit I–135–( ) are 1.5 and 90 volts. These tests apply to both the receiver and the transmitter crystals. Turn in defective crystals for salvage. Leave a good transmitter crystal of the proper frequency in Test Unit I–135–( ) for receiver presetting adjustments.

111. Presetting Receiver With Test Equipment IE–17–( )

Set up equipment as described in paragraph 102. Turn the radio set on by extending the antenna rod

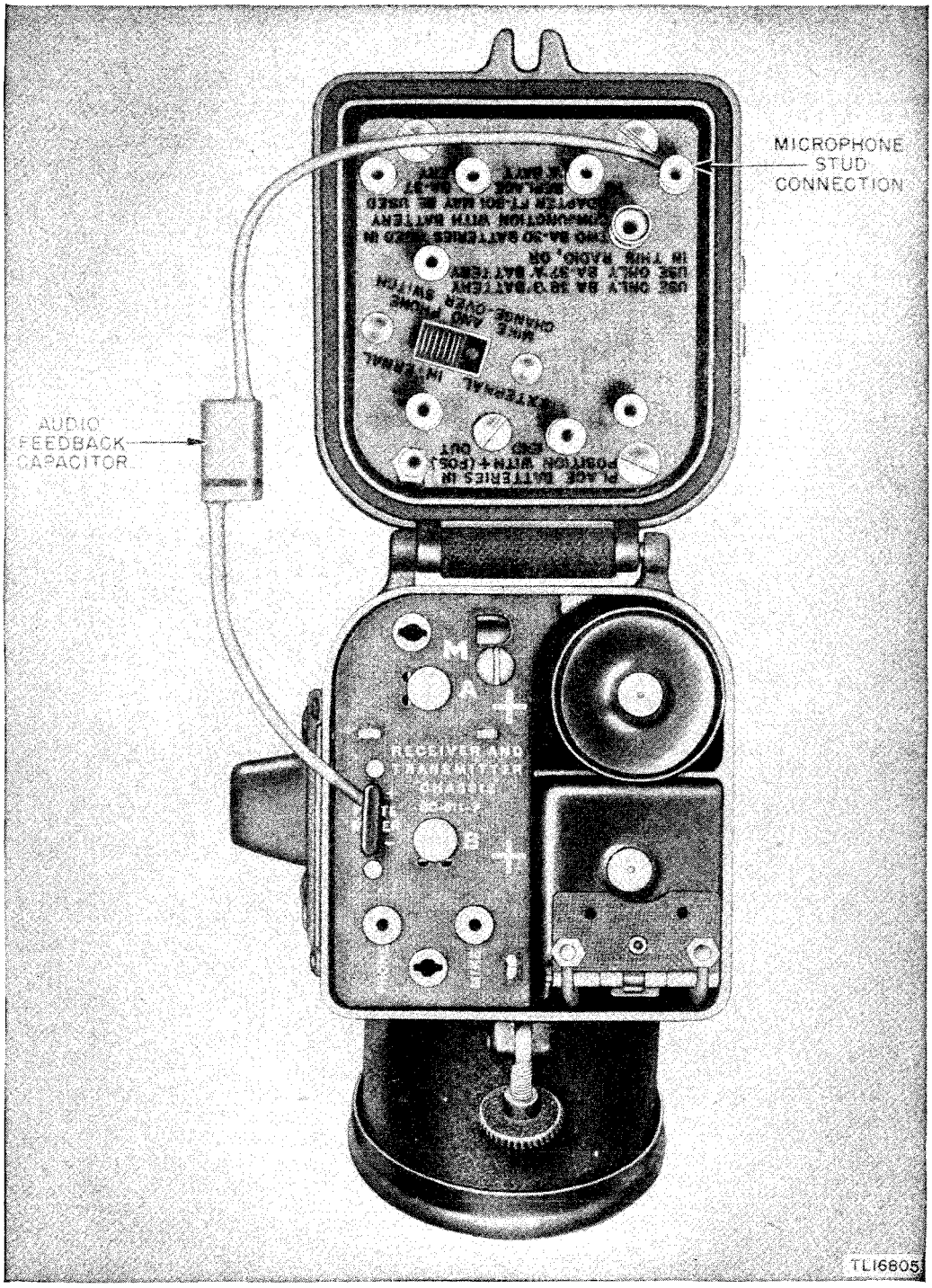

Figure 75. Connection of audio feedback capacitor in models with new bottom cover.

to its full length. Do not press the press-to-talk switch of the test case during the receiver presetting adjustments.

a. Before presetting the receiver, check the crystals. (See par. 110.) Check operating voltages and currents, using the miltirange meter of Test Unit I–135–( ). The chart below lists normal voltage and current readings.

b. Set the MODULATE TESTER switch at ON. The 1,000-cycle-per-second tone will now modulate the carrier signal.

Note. The r-f signal for tuning is fed into the receiver by radiation from the compartment of the test unit in

Setting of MASTER SWITCH	Meter reading
BA–37 O–3 V. D. C.	1.35 v (min) to 1.5 v
BA–37 O–600 MA. D. C.	250 ma
BA–38 O–150 V. D. C.	85 v (min)
BA–38 O–60 MA. D. C.	5–11 ma

which the crystal is located. The slide cover of the crystal compartment acts as a radiation control, preventing the signal from radiating when closed and allowing maximum radiation when open. If the set is badly out of adjustment, the r-f signal picked up by the receiver may not be sufficient to give a reliable audio voltage reading on the meter (OUTPUT O–6 V. A. C. position). For such a condition, connect a short piece of wire to the Fahnestock clip marked R-F OUTPUT. This clip is located in the crystal compartment of the test unit. The wire acts as an antenna and increases the radiation of the r-f signal. Varying the position of this wire with respect to the antenna of the radio set or varying the length of the wire will control the strength of the signal radiated. In extreme cases the wire connected to the R-F OUPUT terminal may have to be wrapped around the radio set antenna.

c. Turn the MASTER SWITCH to OUTPUT 60 V. A. C. A reading will be indicated on the meter and a 1,000-cycle-per-second tone will be heard in the earphone of the test unit.

d. Grasp the test case with one hand and perform the tuning procedures described in paragraph 106.

e. Turn the MASTER SWITCH to OFF. Remove the transmitter crystal from Test Unit I–135–( ). Telescope the rod antenna and remove the test harness and the knurled fastening screw from the chassis in the test case. Slide the chassis out of the test case. Remove the receiver crystal and install it in Test Unit I–135–( ). Insert the transmitter crystal in its proper socket in the radio set, making sure it is properly installed; put the chassis back in the test case for transmitter presetting. (See par. 112.) Tighten the mounting screw and attach the harness terminal board. Put the test case in place on the test stand.

112. Presetting Transmitter With Test Equipment IE–17–( )

Set up the equipment as described in paragraph 102. Grasp the test case and depress the press-to-talk switch with one hand during all following presetting adjustments of the transmitter. The switch may be held depressed by a clamp or a wire tightened around the case. The MODULATE TESTER switch should be OFF unless otherwise specified.

a. Extend the antenna of the radio set to its full length. This will operate the power switch in the radio set chassis.

b. Before presetting the transmitter, check operating voltages and currents using the multirange meter of Test Unit I–135–( ). The following voltage and current readings should be obtained with the press-to-talk switch on the radio set depressed.

Setting of MASTER SWITCH	Meter reading
BA–37 O–3 V. D. C.	1.35 v (min) to 1.5 v
BA–37 O–600 MA. D. C.	275–300 ma
BA–38 O–150 V. D. C.	75 v (min)
BA–38 O–60 MA. D. C.	26–30 ma

c. The transmitter is now ready for presetting. Turn the MASTER SWITCH on the test unit to PWR. AMP. Adjust the transmitter tank adjustment screw for *minimum* current reading on the meter in the test unit. The normal reading in this position is approximately 7 milliamperes. See figure 72 for location of transmitter tank adjustment. Be sure to depress the press-to-talk switch during this operation.

d. Telescope the upper three sections of the antenna rod, leaving only the bottom or fourth section fully extended from the housing. Clip the dummy antenna connection to the upper part of the antenna rod. Set the antenna change-over switch on the panel of Test Stand FT–252–( ) to the TRANS. position. Then, still grasping the test case and press-to-talk switch, use the insulated shaft extension to adjust the dummy antenna capacitor control for minimum current reading on the meter in Test Unit I–135–( ) (approximately 7 ma in PWR. AMP. position). This adjustment of the dummy antenna capacitance for minimum power-amplifier plate current is necessary to compensate for the change in antenna capacitance due to the telescoping of the upper three sections of the antenna rod. Observe the reading of the antenna current meter on Test Stand FT–252–( ). This should be from 15 to 30 milliamperes, and represents the unmodulated antenna current.

e. Switch the MODULATE TESTER switch to ON, and press the MODULATE TRANSMITTER button on the test unit. This modulates the transmitter by applying a 0.2-volt, 1,000-cycle-per-second audio signal across the microphone terminals. Note the rise in the antenna current meter reading when the modulated signal is applied. This rise should be at least 6 percent over the unmodulated current reading. A 6-percent increase in antenna current indicates 50-percent modulation. For example, assume that the unmodulated antenna current is 20 milliamperes and that the modulated current is 22 milliamperes. The increase in current is then 2 milliamperes. The percentage increase will be: $2/20 \times 100 = 10$ percent.

Note. Further checks on modulation may be made by whistling into the microphone or holding a sustained note. There should be a substantial rise in current. The MODULATE TRANSMITTER button must not be pressed when using this method.

f. Remove the chassis from the test case, put it into the radio set housing, and reconnect the microphone and the earphone. *Be sure to put back the plate current meter jumper.* Reinstall the A and B batteries, making certain that the positive (+) ends face outward. Close the cover, move the latching bolt into place, and tighten the knurled nut. The set is now ready for operation.

113. Testing Batteries BA–37 and BA–38 With Test Equipment IE–17–( )

Be sure that the external heavy-duty batteries are disconnected.

a. Mount the radio set chassis in the test case with both crystals in place.

b. Connect the test unit and clamp the case in the test stand with the antenna rod extended.

c. Depress the press-to-talk switch, and turn the MASTER SWITCH of the test unit and the MODULATE TESTER switch to OFF.

d. Place Batteries BA–37 and BA–38 in the compartment of the test unit. Close and secure the compartment cover. (See fig. 63.)

e. Place the MASTER SWITCH on the test unit to BA–37 0–3 V. D. C. and observe the meter reading. Normal readings will be between 1.35 and 1.5 volts. If the voltage is less than 1.25 volts, replace the battery.

f. Place the MASTER SWITCH on the test unit to BA–38 0–150 V. D. C. and observe the meter reading. Be sure that the set is in the transmit position. The normal meter readings will be between 75 and 103.5 volts. If the voltage is below 70 volts, replace the battery.

g. If it is necessary to discard Battery BA–37 or Battery BA–38 because of low voltage, replace both batteries at the same time. Batteries which are near the lower voltage limit may be used, but they will reduce the over-all performance of the radio set.

114. Receiver Sensitivity

The chart below gives the average signal input voltages required for a fixed receiver output. These values were obtained under the following conditions:

a. Chassis removed from Test Case CS–81–( ).

b. Battery BA–37 voltage: 1.45 volts.

c. Battery BA–38 voltage: 100 volts.

d. Receiver earphone, or equivalent, connected across receiver output.

Signal generator connected to	Signal generator frequency setting[a]	Dummy	Signal input to produce 20-volt output on VTVM[b]	Signal input to produce 15-volt output on meter[c]
Antenna.....	Receiver frequency	Through Test Stand FT–252–( ).	3 mv (micro-volts).	4 mv
Antenna.....	Receiver frequency +910 kc (image frequency).	Through Test Stand FT–252–( ).	1,850 mv	2,250 mv
Antenna.....	455 kc	0.1 mf	24,000 mv	26,000 mv
R-f grid.....	Receiver frequency.	0.1 mf	27 mv	28 mv
Converter grid.	455 kc	0.1 mf	190 mv	200 mv
I-f grid.....	455 kc	0.1 mf	2,400 mv	2,400 mv
Microphone amplifier grid.	1,000 cps	0.1 mf	0.25 v	0.275 v
A-f output amplifier grid.	1,000 cps	0.1 mf	1.1 v	1.3 v

[a] Signal generator modulation: 400 cps, 30 percent.

[b] Values listed in this column are for 20-v output reading on a vacuum tube voltmeter (General Radio type 726–A).

[c] Values listed in this column are for 15-volt output reading on 50-volt a-c range of selective analyzer of Test Set I–56–( ).

115. Receiver Performance Characteristics

Note. All values taken with chassis in Test Case CS–81–( ).

Test	Average		Minimum	
	Using VTVM	Using Test Set I–56–( )	Using VTVM	Using Test Set I–56–( )
Sensitivity*.....	3 mv[ac]	4 mv[bd]	6 mv[ac]	7 mv[bd]
Image ratio.....	800	800	150	150
Signal plus noise/noise† ratio.			2/1	2/1
Maximum audio output.	50 volts[a]	22 volts[b]	40 volts[a]	18 volts[b]
Battery BA–37:				
Voltage.....	1.4 volts	1.4 volts		
Current.....	235 ma	235 ma	275 ma (max)	275 ma (max)
Battery BA–38:				
Voltage.....	103 volts	103 volts		
Current.....	11 ma	11 ma	14 ma (max)	14 ma (max)

[a] Readings made on a vacuum tube voltmeter (General Radio type 726–A).

[b] Readings made on selective analyzer of Test Set I–56–( ).

[c] 20-volt output meter reading. Signal generator modulation: 400 cps, 30 percent.

[d] 15-volt output meter reading. Signal generator modulation: 400 cps, 30 percent.

* With equipment set up in Test Stand FT–252–( ). Only bottom section of antenna extended.

† Ratio of output with modulated signal input to output with unmodulated signal input.

116. Transmitter Performance Characteristics

The chart below gives the average transmitter performance characteristics.

Note. All values taken with chassis in Test Case CS–81–( ).

Test	Average	Minimum
R-f current:		
Unmodulated....	18 ma (r-f power: 181 mw)	15 ma (r-f power: 126 mw)
Modulated.....	20.5 ma (r-f power: 255.3 mw)	17.5 ma (r-f power: 170 mw)
Modulation..... capability.	Over 50 percent	Over 50 percent
Battery BA–37:		
Voltage.....	1.4 v	
Current.....	280 ma	330 (max)
Battery BA–38:		
Voltage.....	95 v	
Current.....	30 ma	37 (max)

Section XIX. EMERGENCY ALIGNMENT AND PRESETTING PROCEDURES

117. General

When equipment is not available for the normal alignment and presetting operations (secs. XVII and XVIII), the procedures outlined in this section may be used. The emergency alignment and presetting procedures duplicate all functions of Test Equipment IE–17–( ) with the exception of crystal testing and measurement of r-f output. Two Radio Sets SCR–536–(*) equipped with coils and crystals for the same frequency are necessary.

a. The set on which adjustments are to be made is inserted in a special test housing similar to Test Case CS–81–( ), which is made by modification of a Radio Receiver and Transmitter BC–611–(*) housing. Another Radio Receiver and Transmitter BC–611–(*) (not necessarily prealigned) is converted into a modulated signal source by causing the speech amplifier to oscillate. This is done by inserting a capacitor across the MIKE and PHONE jacks of the set used as a signal source and tying down the press-to-talk switch. The modulated signal from the set used as a signal source is received by the set to be aligned and preset. The signal is indicated by a headset or milliammeter, and is used for peak receiver adjustments of the set under alignment. (See figs. 83 and 84.)

b. After the receiver has been aligned, the transmitter is adjusted by restoring the set used as a signal source to normal operating conditions, converting the set under alignment into a signal source by inserting the capacitor, and adjusting the transmitter circuit of the set under alignment. Alignment is indicated by making peak transmitter adjustments and listening to the signal from the set under alignment by use of a headset or meter attached to the set previously used as a signal source.

118. Major Test Equipment Components

The components listed are fabricated from equipment and parts available in the field. The components of the test equipment used in emergency alignment and presetting are as follows:

- 2 Radio Set SCR–536–(*). One or both housings modified and equipped with battery cables and octal male plugs.
- 1 "Twisted wire" or 15–25-mmf capacitor.
- 1 Headset HS–30–( ) with Cord CD–874, or Headset HS–18, or equivalent headset and cord combination.
- 1 Milliammeter (Weston model No. 665), part of Test Set I–56–A or equal (*optional*).
- 2 Batteries BA–43 (*optional*).
- 1 Adapter cord, fabricated to adapt the termination of the headset to two small alligator clips for connection of the headset to the earphone unit of the test housing.

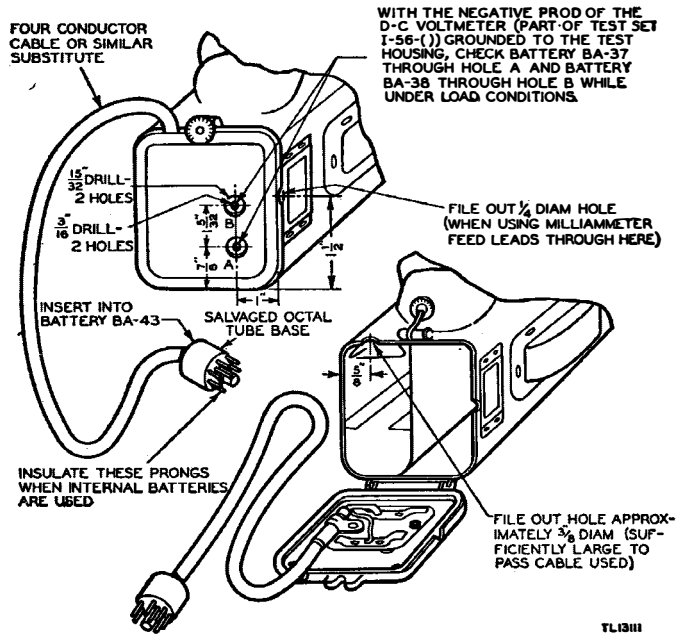

Figure 76. Location of holes in bottom cover.

119. Housing Modification

To modify the housing, proceed as follows:

Warning: *The modification of the set housings is authorized only when the housings are in excess of organization requirements for Radio Set SCR-536–(*). Under no circumstances will the housings*

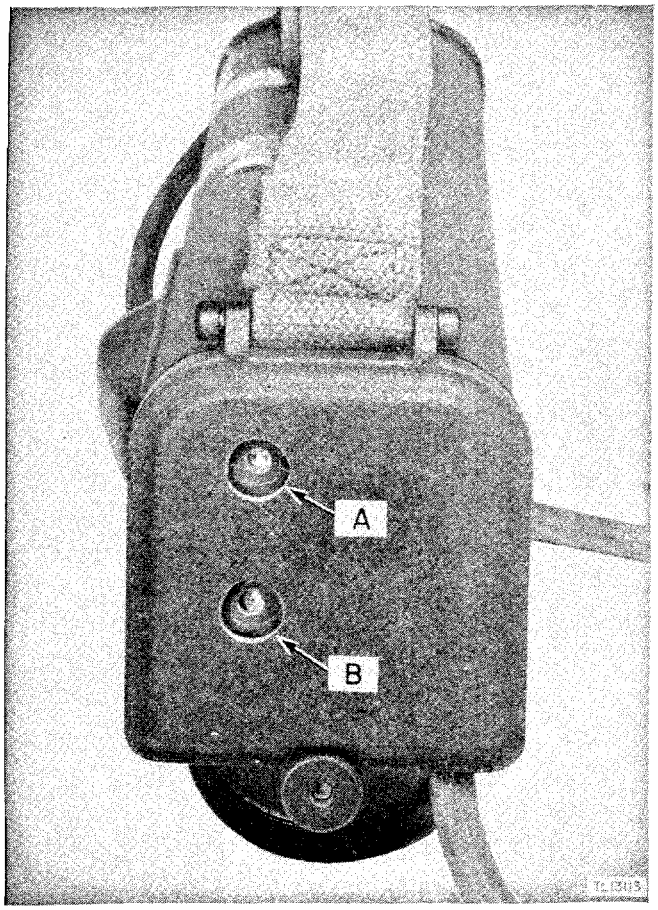

Figure 77. Battery check holes.

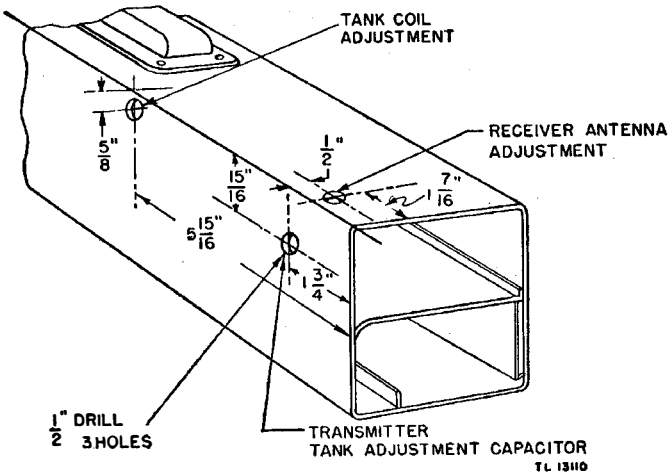

Figure 78. Location of holes in housing.

of usable Radio Sets SCR–536–(*) be modified.

a. Remove the batteries from the housing and pull out the microphone and earphone plugs from the terminal board.

b. Unscrew the mounting screw and remove the chassis from the housing.

c. Using a hacksaw or drill, cut or drill the top inclosed portion of the antenna cover so that the antenna may be extended with the cover encircling it.

d. Locate and file a 3/8-inch hole and a 1/4-inch hole in the bottom cover and bottom of case as shown in figure 76.

Note. Be very careful when filing, center-punching, and drilling, since the housing is a casting and will break if unduly stressed. The drilling and filing described will modify the housing to permit alignment of Radio Receiver and Transmitter BC–611–A, –B, –C, –D, and –E. Additional drilling and filing must be performed to accommodate Radio Receiver and Transmitter BC–611–F.

e. Close the bottom cover. Locate, center-punch, and drill two 3/16-inch holes through the cover and battery contact board, exposing the contact clips at points A and B as shown in figures 76 and 77. Care should be taken not to drill through the battery contact clips. Do not perform this operation on models equipped with the bottom cover with jacks for ex-

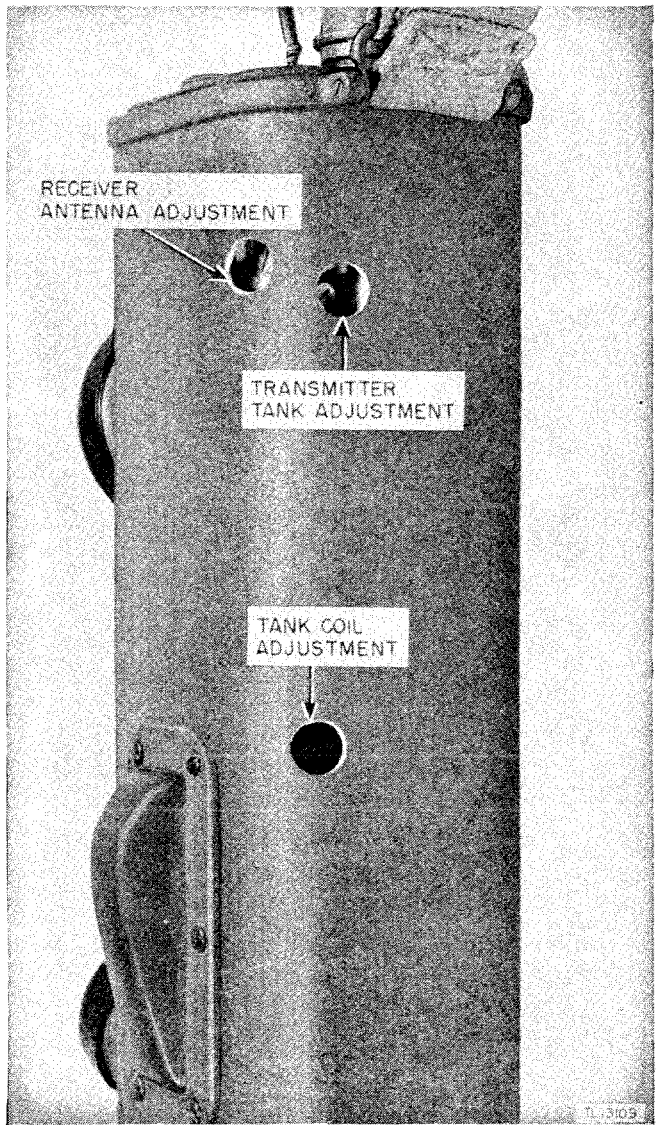

Figure 79. Presetting adjustment holes.

ternal use. To check voltage under load on these models, connect the meter test prods to the proper contacts of the plug used to connect an external battery. (See fig. 76.)

f. Remove the two screws holding the battery contact board to the bottom cover, remove the battery contact board, and enlarge holes A and B in the cover using a $\frac{15}{32}$-inch drill. (See figs. 76 and 77.) For reference purposes, apply name tabs as shown in figure 77.

g. Locate the three holes as shown in figures 78 and 79. Where measurements fall on the curved portion of the housing, place a straight edge along the side from which measurements are given and

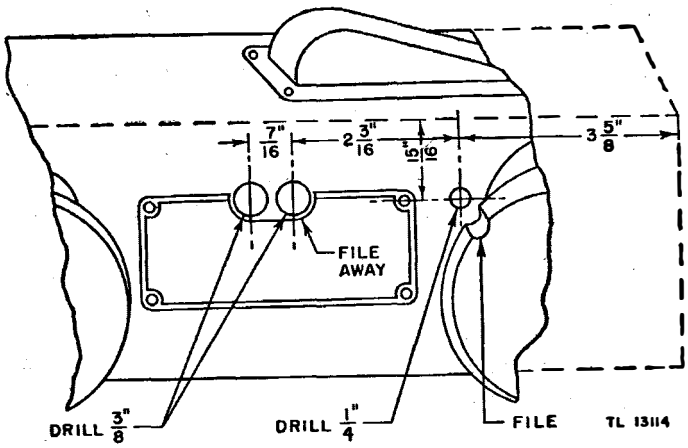

Figure 80. Location of holes for i-f adjustments.

butt the rule against it. Center-punch and drill the three holes, using a $\frac{3}{16}$-inch drill. Enlarge the holes, using a $\frac{1}{2}$-inch drill, and apply name tabs. (See figs. 78 and 79.)

h. Remove the microphone cover. Locate, center-punch, and drill a $\frac{1}{4}$-inch hole as shown in figures 80 and 81.

i. Replace the microphone cover and file the edge of the cover slightly above the $\frac{1}{4}$-inch hole to permit the use of a screw driver in a vertical position.

j. Remove the nameplate from the side of the housing. Locate, center-punch, and drill two holes as shown in figures 80 and 81, using a $\frac{3}{16}$-inch drill. Enlarge the two holes, using a $\frac{3}{8}$-inch drill.

k. Cut the nameplate to clear the two holes as shown in figures 80 and 81.

l. Mount the nameplate in the original position and apply name tabs near the adjustments shown in figure 81.

m. Replace the battery contact board.

n. Fasten the battery cable to the bottom cover, using a suitable clamp. Solder the cable to the contact springs and clamp on the contact board as shown in figure 82. (Make connections to the proper contacts on the bottom cover equipped with jacks for external units).

o. Clear the housing of all drill chips and filings; slide the chassis back in place; replace the mounting screw, batteries, and bottom cover; and check the over-all performance of the unit.

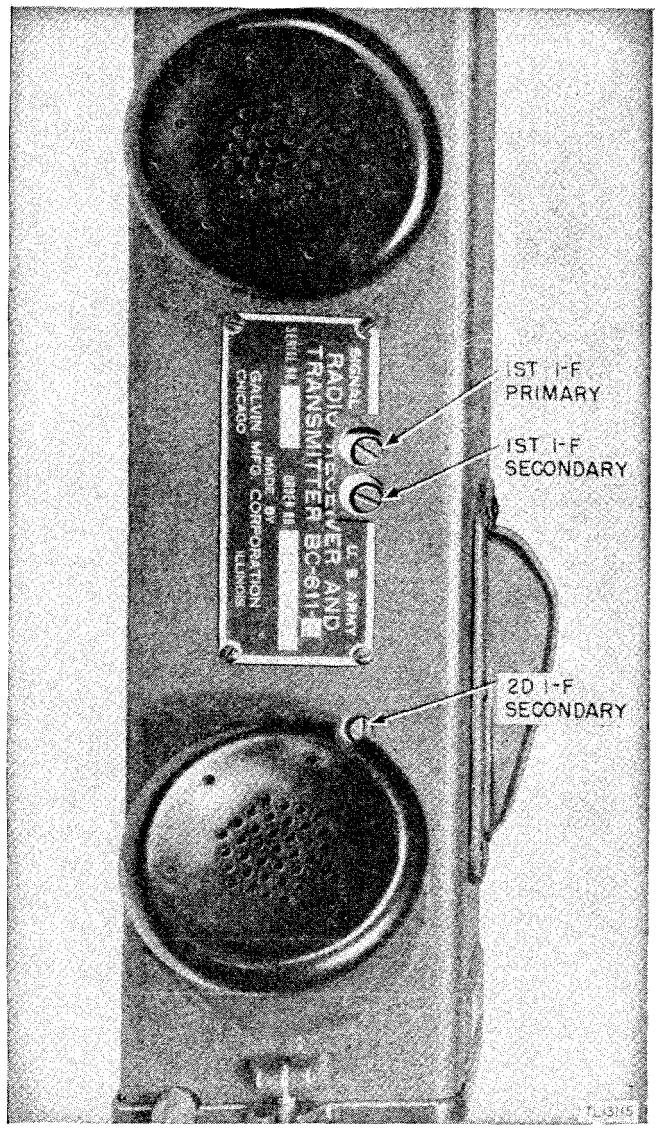

Figure 81. I-f adjustment holes.

120. Feedback Capacitor

Fabricate the capacitor from two lengths of insulated wire about 5 inches in length. (The gauge of these wires should be such that the microphone and earphone jacks will not be damaged.) Strip one end of each of the wires, and twist the two wires tightly together to form a capacitor. Insulate the free ends of the insulated wires so as not to interfere with

the battery contacts on the chassis cover when the cover is closed. A small 15–25-mmf capacitor may be used in place of the twisted wire capacitor.

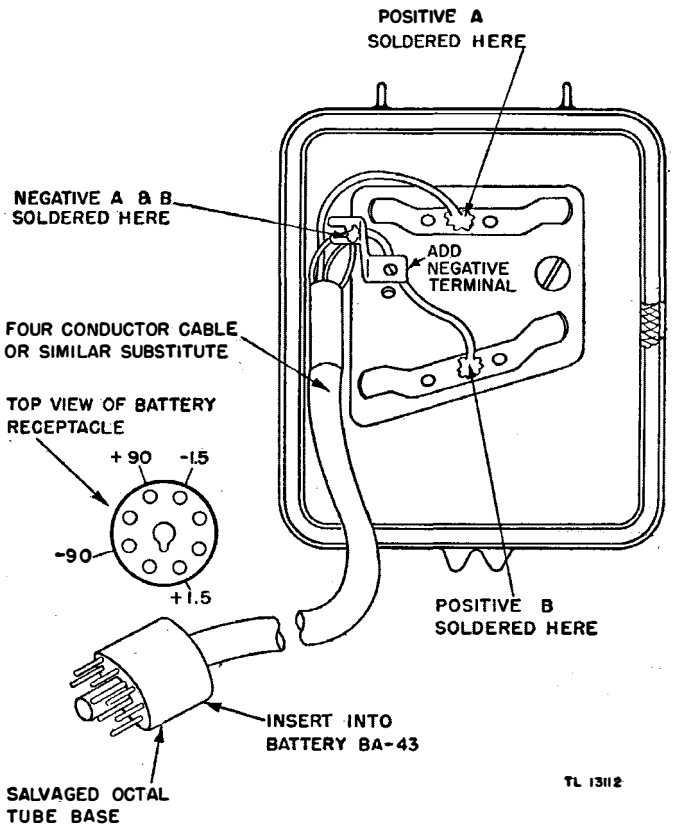

Figure 82. Modification of bottom cover.

121. Receiver Alignment

In the alignment procedures, the set referred to as set A will be the set under alignment. Set B will be the auxiliary "test set." (See fig. 83.)

a. Remove the chassis of two sets from their housings and inspect the crystals and coils to make certain that both sets are equipped to operate on the same frequency.

b. Place the chassis of the set to be aligned (set A) in the modified case. If Battery BA–43 is available, do not insert Batteries BA–37 and BA–38 into the test housing, but insert the male plug terminating the cord attached to the housing into Battery BA–43.

Caution: *When using Batteries BA–37 and BA–38, insulate the exposed prongs of the male octal plug.*

c. Connect the microphone and earphone plugs. Unscrew the earphone cap. Connect one alligator clip of the headset adapter cord to the ungrounded lug of the earphone unit, and ground the other to the case.

d. Put the other set (set B) into the set housing, or modified housing. This set is to be used as a signal source. Do not insert the microphone and earphone plugs into their receptacles, but push the plugs down into the space between Battery BA–38 and the wall of the set housing. Insert the twisted

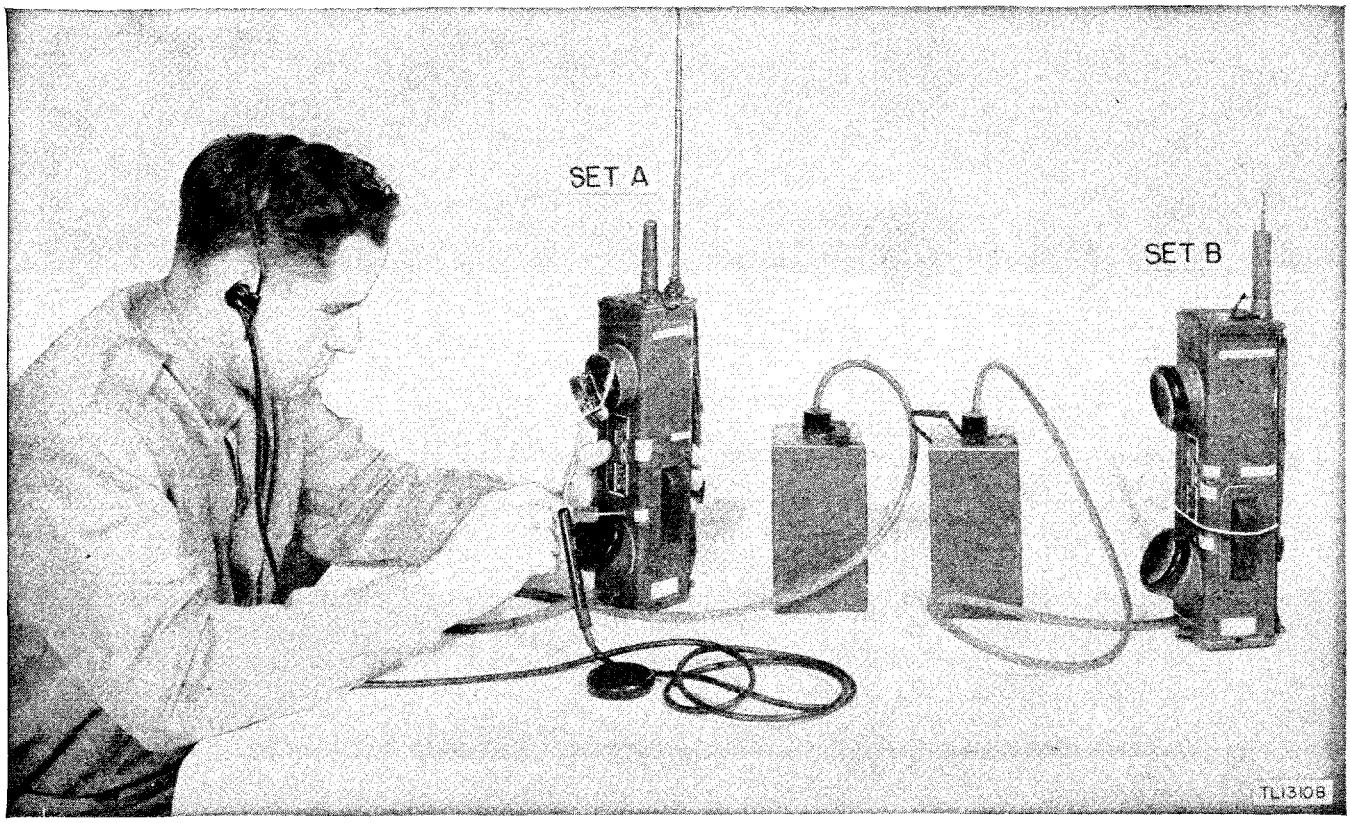

Figure 83. Emergency test equipment, using headset.

wire or 15–25-mmf capacitor into the MIKE and PHONE jacks of set B.

e. Place set A in operation by extending the antenna *full length.* Screw the antenna cover to the threaded stud normally used to hold the cover when the antenna is extended.

f. Place set B in operation by pulling out the lower section of the antenna just enough to throw the switch. Screw a modified antenna cover over the slightly extended antenna of set B. Keep this set in the transmit position by binding a piece of wire or cord tightly around the case to hold the press-to-talk switch depressed.

g. The signal from set B should now be heard in the headset of set A. Adjust the strength of this signal by raising or lowering the antenna of set B and by placing set B nearer or farther away from set A. The signal should be as weak as possible. The weaker the signal the better the tuning adjustments.

h. Adjust the i-f transformers of set A for maximum signal as heard in the headset. Reduce the signal strength if necessary. The adjustments should be made at least twice.

i. Adjust the receiver antenna adjustment for maximum signal. Grasp the test case with one hand when making this adjustment.

j. Adjust the tank coil for maximum signal.

Caution: Do not force the screw, or threads will be stripped. This adjustment is broad, and care must be exercised.

122. Transmitter Alignment

a. Remove the microphone and earphone plugs of set A, and insert the capacitor which was used in set B during receiver alignment. Insert the microphone and earphone plugs of set B into their respective jacks. Connect Headset HS–18, or equivalent, to the earphone of set B, just as it was connected to set A during receiver alignment. Place set B in the receive position.

b. Depress the press-to-talk switch of set A. The signal from this set should now be heard in the headset connected to set B. Adjust the tank capacitor of set A for maximum signal as heard in set B.

c. Remove the capacitor and headset, and insert the microphone and earphone plugs into their proper jacks.

Note. If a milliammeter (such as Weston model 665, part of Test Set I–56–A) is available, it may be used instead of the headset by removing the plate current meter jumper from set A and connecting the milliammeter leads to the jacks marked PLATE METER. All adjustments are then made for minimum current. (See fig. 84.) Note

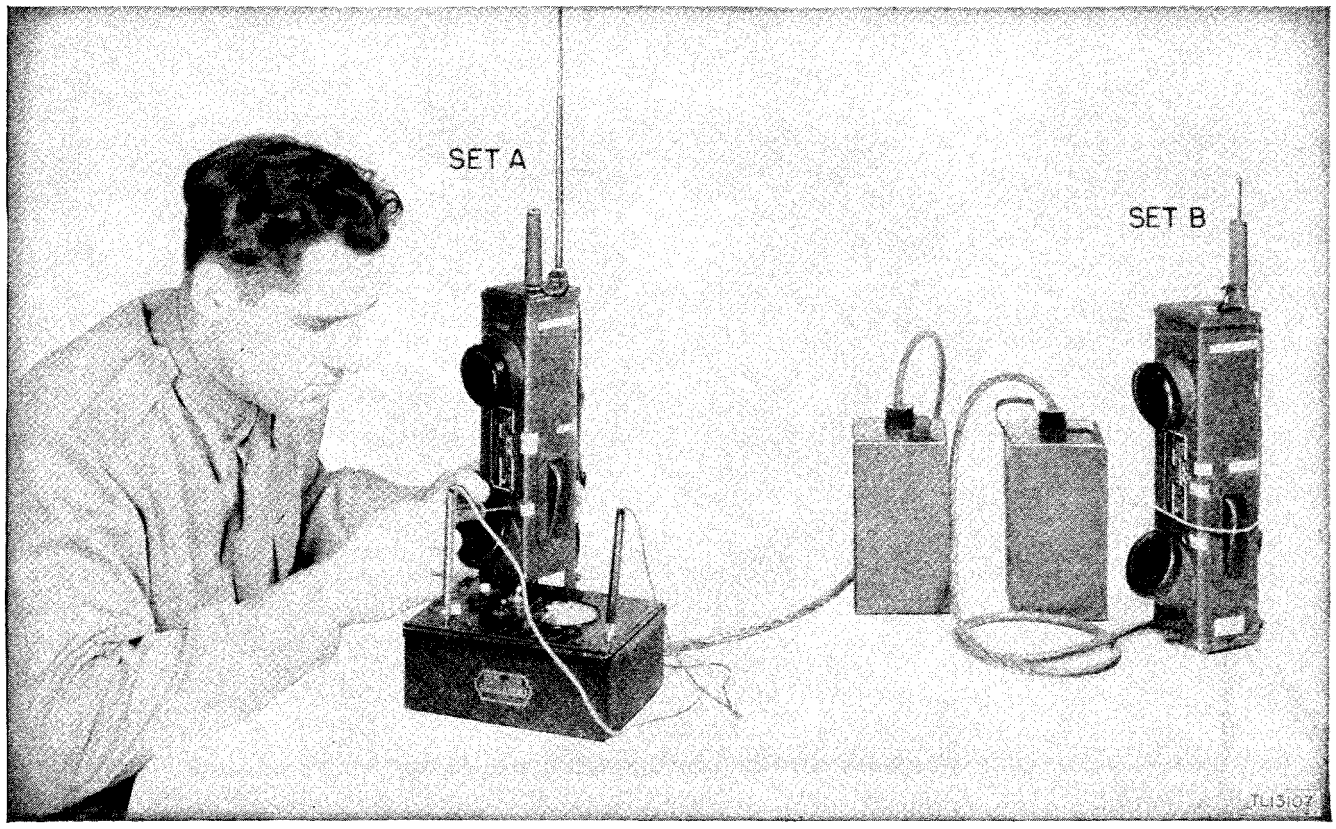

Figure 84. Emergency test equipment, using milliammeter.

that in this method the signal should be fairly strong. Also note that when a milliammeter is used in place of a headset as an indicating device, it is connected to set A for both transmitter and receiver circuit adjustments. (In the receive position, the a-v-c voltage causes a decrease in r-f amplifier current as the signal in the detector stage increases.)

123. Battery Checking

Batteries BA–37 and BA–38 are checked under load with the set operating in the transmit position. Use a d-c voltmeter (Weston model 665, part of Test Set I–56–A, or similar type d-c voltmeter).

a. Ground the negative voltmeter prod to the radio set housing.

b. Insert the positive prod through the hole provided for measuring the A battery voltage (hole farthest from the latching bolt). Make good contact with the metal spring clip exposed by the hole. Normal readings are between 1.35 and 1.5 volts for Battery BA–37. If the voltage is less than 1.25 volts, replace the battery.

c. Insert the positive prod through the hole provided to measure the B battery voltage. Normal readings for Battery BA–38 are between 75 and 103.5 volts. If the voltage is below 70 volts, replace the battery.

Note. If it is necessary to discard Battery BA–37 or Battery BA–38 because of low voltage, replace *both* batteries in the radio set at the same time. Batteries which are near the lower voltage limit may be used, but they will reduce the over-all performance of the radio set.

124. Alignment of Set Used as Signal Source

After set A has been aligned, set B may be aligned by inserting the chassis into the modified case. If both housings have been altered, the alignment procedure may be followed without removing either chassis from its housing.

APPENDIX 1

REFERENCES

1. Army Regulations

AR 308–5, Safeguarding Military Information.

2. Supply Publications

SIG 1, Introduction to ASF Signal Supply Catalogue.

SIG 2, Complete Index to ASF Signal Supply Catalogue.

SIG 3, List of Items for Troop Issue.

SIG 4–1, Allowances of Expendable Supplies.

SIG 4–2, Allowances of Expendable Supplies for Schools, Training Centers, and Boards.

SIG 5, Stock List of All Items.

SIG 6, Sets (when published).

SB 11–6, Dry Battery Supply Data.

SB 11–8, Chests for Running Spares for Radio Set SCR–506–( ), SCR–508–( ), SCR–528–( ), and SCR–538–( ).

SB 11–10, Signal Corps Kit and Materials for Moisture- and Fungi-resistant Treatment.

SB 11–17, Electron Tube Supply Data.

3. Technical Manuals on Auxiliary Equipment and Test Equipment

TM 11–300, Frequency Meter Sets SCR–211–A, B, C, D, E, F, J, K, L, M, N, O, P, Q, R, T, AA, AC, AE, AF, AG, AH, AJ, AK, AL.

TM 11–303, Test Sets I–56–C, I–56–D, I–56–H, and I–56–J.

TM 11–311, Test Equipment IE–17–E.

TM 11–321, Test Set I–56–E.

TM 11–472, Repair and Calibration of Electrical Measuring Instruments.

4. Painting, Preserving, and Lubrication

TB SIG 13, Moistureproofing and Fungiproofing Signal Corps Equipment.

TB SIG 69, Lubrication of Ground Signal Equipment.

5. Camouflage

FM 5–20, Camouflage, Basic Principles.

6. Shipping Instructions

U.S. Army Spec. No. 100–14A, Army-Navy General Specification for Packaging and Packing for Oversea Shipment.

7. Decontamination

TM 3–220, Decontamination.

8. Demolition

FM 5–25, Explosives and Demolitions.

9. Other Publications

FM 21–6*, List of Publications for Training.

FM 24–18, Radio Communication.

MWO SIG 11–235–1, Replacement of Press-To-Talk Switch in Radio Set SCR–536–A, B, and C.

MWO SIG 11–235–2, Modification of Radio Sets SCR–536–A, B, and C to Prevent Breakage of Antenna Guide.

MWO SIG 11–235–3, Replacement of Microphone and Earphone Caps on Radio Sets SCR–536–A, B, and C.

MWO SIG 11–235–4, Replacement of Chassis Mounting Bracket with Improved Bracket, Radio Set SCR–536–A, B, C, D, and E.

MWO SIG 11–235–5, Modification of Radio Sets SCR–536–A, B, C, D, E, and F to Permit Use of Homing Modification Kit MC–619.

W.D. Pamphlet 12–6,† List and Index of Administrative and Supply Publications.

TB SIG 5, Defense Against Radio Jamming.

TB SIG 66, Winter Maintenance of Signal Equipment.

TB SIG 72, Tropical Maintenance of Ground Signal Equipment.

TB SIG 75, Desert Maintenance of Ground Signal Equipment.

TB SIG 123, Preventive Maintenance Practices for Ground Signal Equipment.

TM 1–455, Electrical Fundamentals.

TM 11–227, Signal Communication Equipment Directory, Radio Communication Equipment.

* See also for applicable Technical Bulletins.
† See also for applicable modification work orders.

TM 11–310, Schematic Diagrams for Maintenance of Ground Radio Communication Sets.

TM 11–314, Antenna and Antenna Systems.

TM 11–453, Shop Work.

TM 11–455, Radio Fundamentals.

TM 11–462, Signal Corps Reference Data.

TM 11–483, Suppression of Radio Noises.

TM 11–496, Training Text and Applicatory Exercises for Amplitude-modulated Radio Sets.

TM 11–499, Radio Propagation Handbook.

TM 37–250, Basic Maintenance Manual.

10. Forms

WD AGO Form 468 (Unsatisfactory Equipment Report).

Army Air Forces Form 54 (Unsatisfactory Report).

11. Abbreviations

a-f ..... audio-frequency
a-v-c ..... automatic-volume-control
c-w ..... continuous-wave
d-c ..... direct-current
i-f ..... intermediate-frequency
JAN ..... prefix designation for radio electron tubes procured under joint Army-Navy specification JAN–1A
kc ..... kilocycle
ma ..... milliampere
mc ..... megacycle
r-f ..... radio-frequency
v ..... volt

12. Glossary

See glossary in TM 11–455.

CAPACITOR COLOR CODES

RMA 6-DOT COLOR CODE FOR MICA-DIELECTRIC CAPACITORS

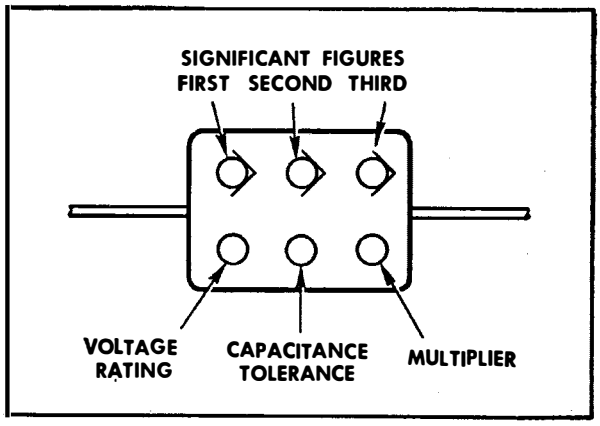

RMA 3-DOT COLOR CODE FOR MICA-DIELECTRIC CAPACITORS

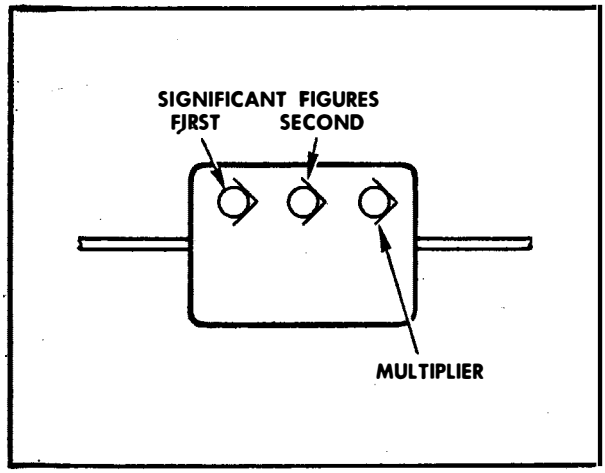

Capacitors marked with this code have a voltage rating of 500 volts.

AWS 6-DOT COLOR CODE FOR PAPER-DIELECTRIC CAPACITORS

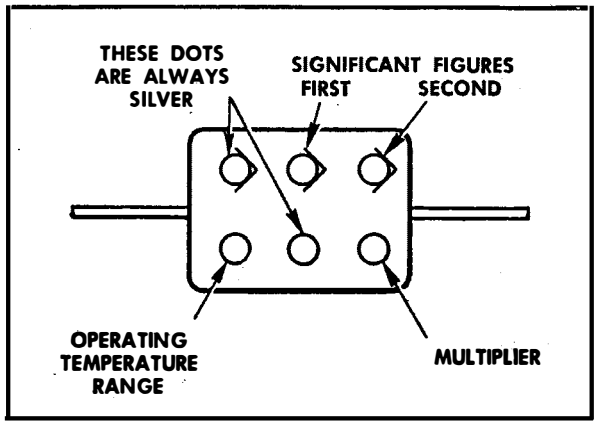

The silver dots serve to identify this marking. The sixth dot shows whether the capacitor has a maximum operating temperature of 167°F (black) or 185°F (brown).

COLOR	SIGNIFICANT FIGURE	MULTIPLIER		VOLTAGE RATING (VOLTS)	CHARACTERISTIC (AWS MICA-DIELECTRIC)
		RMA MICA- AND CERAMIC-DIELECTRIC AWS MICA- AND PAPER-DIELECTRIC	AWS CERAMIC-DIELECTRIC		
BLACK	0	1	1		A
BROWN	1	10	10	100	B
RED	2	100	100	200	C
ORANGE	3	1000	1000	300	D
YELLOW	4	10,000		400	E
GREEN	5	100,000		500	F
BLUE	6	1,000,000		600	G
VIOLET	7	10,000,000		700	
GRAY	8	100,000,000	0.01	800	
WHITE	9	1,000,000,000	0.1	900	
GOLD		0.1		1000	
SILVER		0.01		2000	
NO COLOR				500	TL13417

Figure 85. Capacitor color codes.

AWS 6-DOT COLOR CODE FOR MICA-DIELECTRIC CAPACITORS

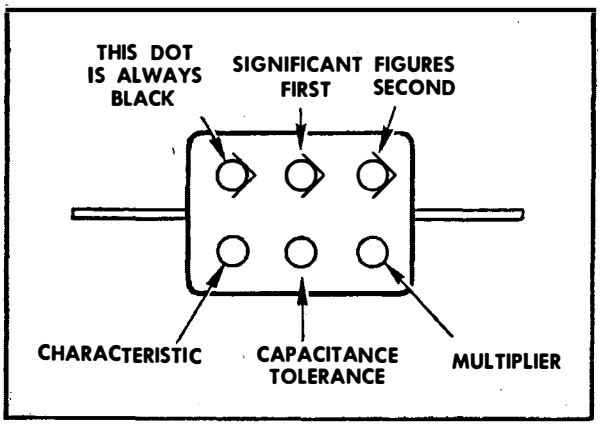

The black dot serves to identify the AWS marking. Capacitors marked with this code are rated at 500 volts, except the following. AWS type CM35 capacitors with capacitances of 6,800, 7,500, and 8,200 micromicrofarads, and AWS type CM40 capacitors with capacitances of 9,100 and 10,000 micromicrofarads are rated at 300 volts.

RMA: *Radio Manufacturers Association*

AWS: *American War Standard (American Standards Association)*

NOTE: These color codes give all capacitances in *micromicrofarads.*

AWS COLOR CODE FOR TUBULAR CERAMIC-DIELECTRIC CAPACITORS

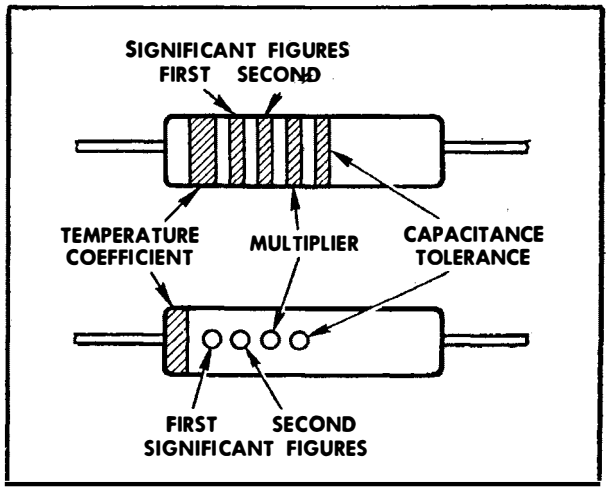

Capacitors marked with this code have a voltage rating of 500 volts.

RMA COLOR CODE FOR TUBULAR CERAMIC-DIELECTRIC CAPACITORS

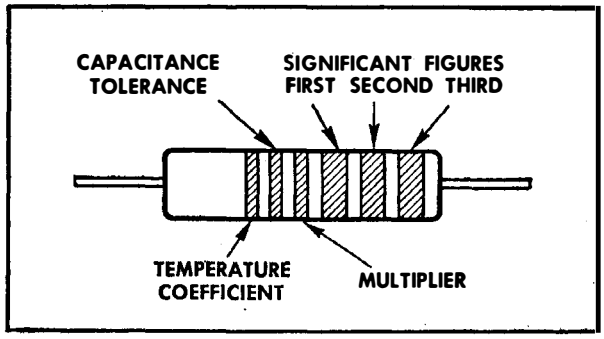

Capacitors marked with this code have a voltage rating of 500 volts.

CAPACITANCE TOLERANCE				TEMPERATURE COEFFICIENT OF CAPACITANCE $\times 10^{-6}$ MMF/MMF/°C
RMA & AWS MICA- AND PAPER-DIELECTRIC (PERCENT)	RMA CERAMIC-DIELECTRIC (PERCENT)	AWS CERAMIC-DIELECTRIC GREATER THAN 10 MMF (PERCENT)	AWS CERAMIC-DIELECTRIC LESS THAN 10 MMF (MMF)	
20	20	20	2.0	0
1	1	1		− 30
2	2	2		− 80
3	3	2.5	0.25	−150
4	4			−220
5	5	5	0.5	−330
6	6			−470
7	7			−750
8	2.5			+ 30
9	10	10	1.0	Not specified
5				
10				
20				TL13417-1

Figure 85. Capacitor color codes—Continued.

RESISTOR COLOR CODES

RMA COLOR CODE FOR FIXED COMPOSITION RESISTORS

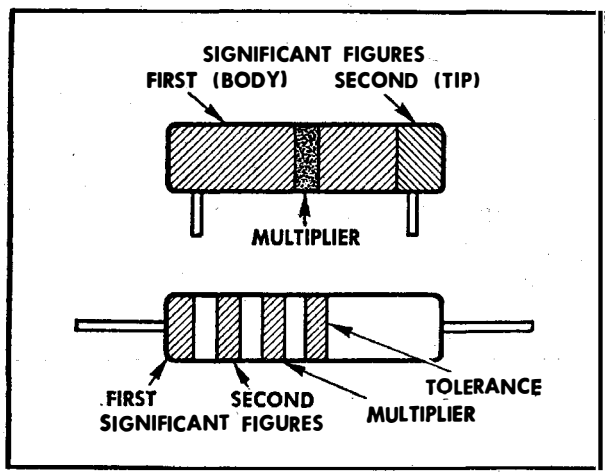

Insulated fixed composition resistors with axial leads are designated by a natural tan background color. Non-insulated fixed composition resistors with axial leads are designated by a black background color.

AWS COLOR CODE FOR FIXED COMPOSITION RESISTORS

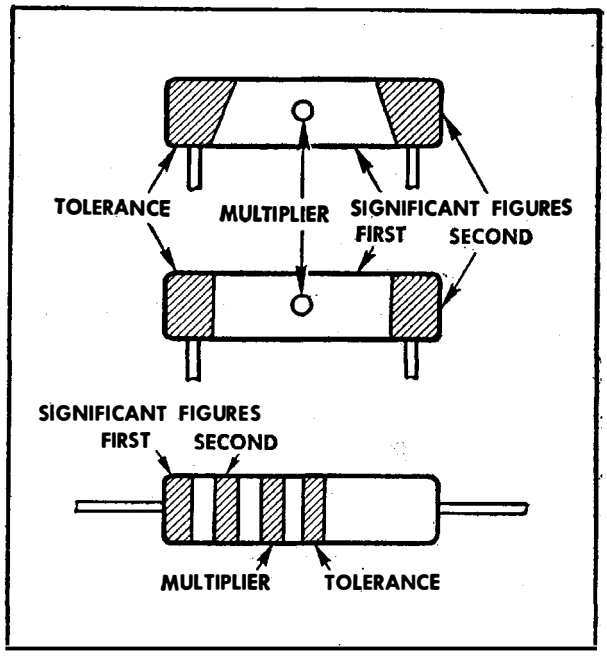

The exterior body color of insulated resistors may be any color except black. The usual color is natural tan. The exterior body color of uninsulated resistors with axial leads may be either black or white. The exterior body color of uninsulated resistors with radial leads may be black or it may be the color of the first significant figure of the resistance value.

COLOR	SIGNIFICANT FIGURE	MULTIPLIER	TOLERANCE (PERCENT)
BLACK	0	1	
BROWN	1	10	
RED	2	100	
ORANGE	3	1000	
YELLOW	4	10,000	
GREEN	5	100,000	
BLUE	6	1,000,000	
VIOLET	7	10,000,000	
GRAY	8	100,000,000	
WHITE	9	1,000,000,000	
GOLD		0.1	5
SILVER		0.01	10
NO COLOR			20

RMA: *Radio Manufacturers Association*
AWS: *American War Standard (American Standards Association)*

TL13418

Figure 86. Resistor color codes.

APPENDIX II

MAINTENANCE PARTS

1. Maintenance Parts for Radio Set SCR–536–(*)

The following information was compiled on 10 March 1945. The appropriate sections of the ASF Signal Supply Catalog for Radio Set SCR-536-A, B, C, D, E, and F are—

SIG 7–SCR–536, *Organizational Spare Parts.*
SIG 8–SCR–536, *Higher Echelon Spare Parts.*

For the latest index of available catalog sections, see ASF Signal Supply Catalog SIG 2.

Note: This list covers first, second, and third-echelon maintenance parts.

Reference	Signal Corps stock No.	Name
Fig. 7	2A292–2	ANTENNA
Fig. 10	2C5351/C1	BRACKET[1] (chassis mounting)
Fig. 11	2Z1612.3	CAP, antenna
	6G199.1	CEMENT
	6G200	CEMENT, rubber
Fig. 29	2Z2626.6	CLAMP, antenna guide
Fig. 6	2Z7111.57	CONNECTOR (earphone and microphone plugs)
Fig. 29	2Z3194–6	CONTACT, spring
Fig. 7	2Z3401.1	COVER, coil (r-f choke)
Fig. 10	2X35.1–18	CRYSTAL UNITS, quartz
Fig. 10	2X52–(freq-kc)	CRYSTAL UNIT. (See par. 54.)
	2C262A	CUSHION MC–162–A[1,2]
Fig. 23	2B475	EARPHONE ASSEMBLY (earphone)
Fig. 6	2C5351A/J2/7	FILLER AND CLIP ASSEMBLY (battery spacer)
Fig. 10	2Z4976	HANGER, strap
Fig. 11	3G1839–31	INSULATOR, antenna
Fig. 10	3G1838–15.9	INSULATOR, support[3]
Fig. 23	2B1709	MICROPHONE, dynamic
Fig. 32	2C5351A/J2/6	PIN, groove (bottom cover plate)
Fig. 6	6L6540–4.9BS	SCREW, machine (switch mounting)
Fig. 11	6L6348–12.5	SCREW, machine (chassis mounting)
Figs. 6 and 10	2S536A/A3/5	SEAL, weatherproof
Fig. 6	2C5351A/J2/5	SPADE BOLT AND COVER NUT ASSEMBLY (latching bolt)
Fig. 10	2C5351/C2	SPACER (chassis mounting)[1]
Fig. 29	2Z8877.6	SPRING, antenna clamp
Fig. 7	2A292–2/6	STOP, antenna (actuator)
Fig. 87	3Z99903K–3	SWITCH KIT (press-to-talk)[4]
	6G2205.2	VASELINE
	6L50523	WASHER (for moistureproofing)

[1] See MWO SIG 11–235–4.
[2] See MWO SIG 11–235–3.
[3] See MWO SIG 11–235–2.
[4] See MWO SIG 11–235–1.

2. Maintenance Parts for Homing Modification Kit MC–619

The following information was compiled on 10 March 1945. The appropriate sections of the ASF Signal Supply Catalog for Homing Modification Kit MC–619 are—

SIG 8–MC–619, *Higher Echelon Spare Parts* (when published).

For the latest index of available catalog sections, see ASF Signal Supply Catalog SIG 2.

Note: This list covers first, second, and third-echelon maintenance parts.

Reference	Signal Corps stock No.	Name
Fig. 46	2A288A–36	ANTENNA, LOOP
Fig. 46	2A300.1	ARM, stationary
Fig. 46	2A300.1	ARM, adjustable
Fig. 39	2S536A/A3*	ASSEMBLY, bottom cover
Fig. 46	3E7267	CABLE ASSEMBLY, AF
Figs. 44 and 45	3D9100V–60	CAPACITOR, variable
Fig. 46	2A478	CLAMP
Fig. 45	2Z2712.42	CLIP, antenna contact
Fig. 45	3C1087–11	COIL, RF
Fig. 46	2Z3064–2	CONNECTOR, female contact
Fig. 38	2Z3021–89	CONNECTOR, male contact
Fig. 45	2Z3023	CONNECTOR, male contact
Fig. 36	3E1605–6.5	CORD CD–605
Fig. 45	2Z3275–1387	COUPLING UNIT BC–1387
Fig. 39	2Z3351–51	COVER ASSEMBLY
Fig. 37	2Z4100–7	ESCUTCHEON
	2Z4867.196	GASKET (moistureseal of connector)
	2Z4867.194	GASKET (moistureseal of top plate)
	2Z4866.213	GASKET (moistureseal of bottom cover)
	2Z4867.197	GASKET (moistureseal of handle)
	2Z4866.212	GASKET (moistureseal of side plate)
	2Z4867.195	GASKET (moistureseal of panel)
	2Z4866.211	GASKET (moistureseal of jack)
Fig. 34	2B830	HEADSET HS–30
Fig. 36	2Z5038	HINGE (loop center)
Fig. 39	2Z5531.43	JACK, telephone
Fig. 37	6L3846–32.1	NUT, sleeve (touch-to-sense)
Fig. 38	2Z7110–9	PLUG, machine thread
Fig. 46	2Z9052–63	STRAP, bundling
Fig. 46	2A3393A.1	SUPPORT, antenna

* See MWO SIG 11–235–5.

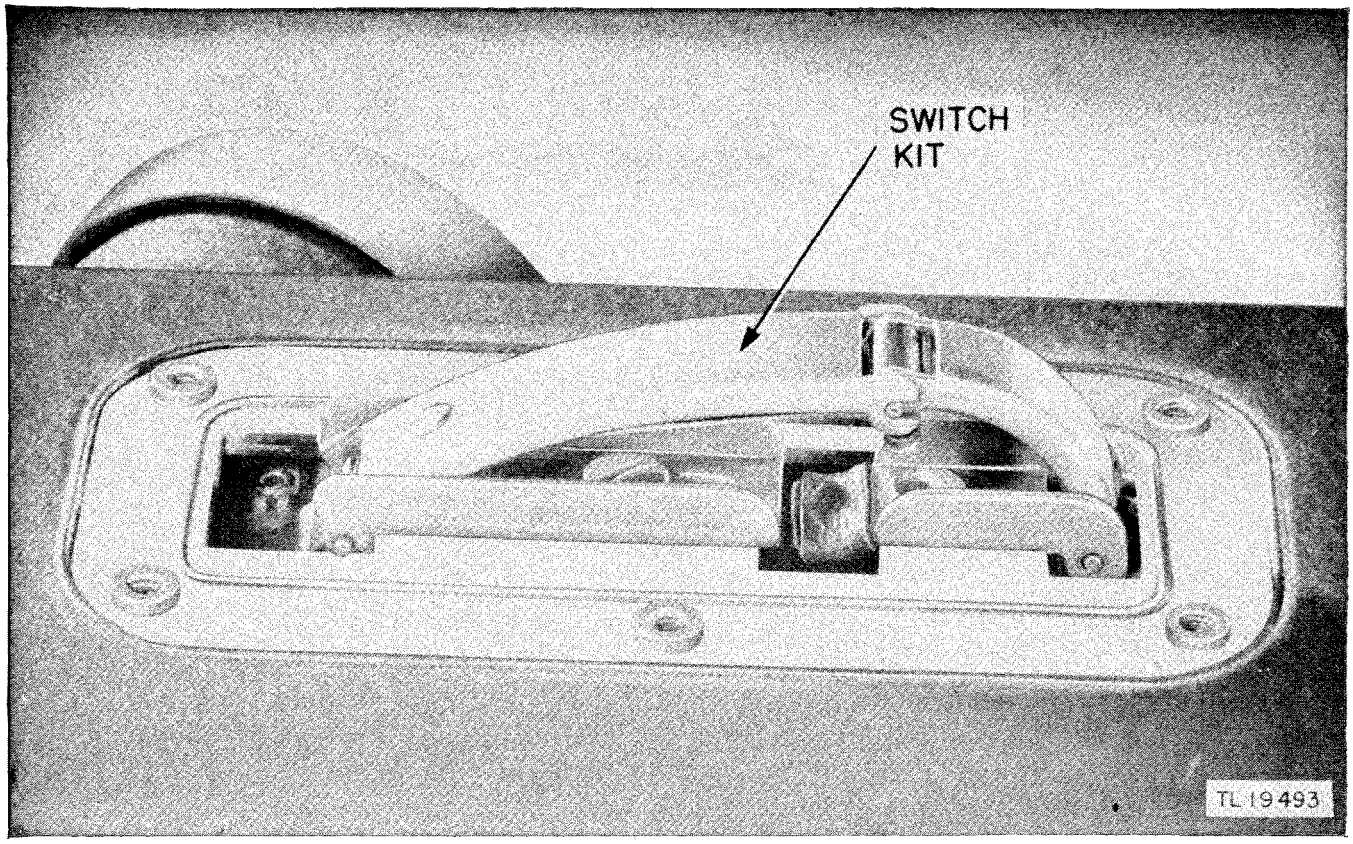

Figure 87. Press-to-talk switch, cover removed.

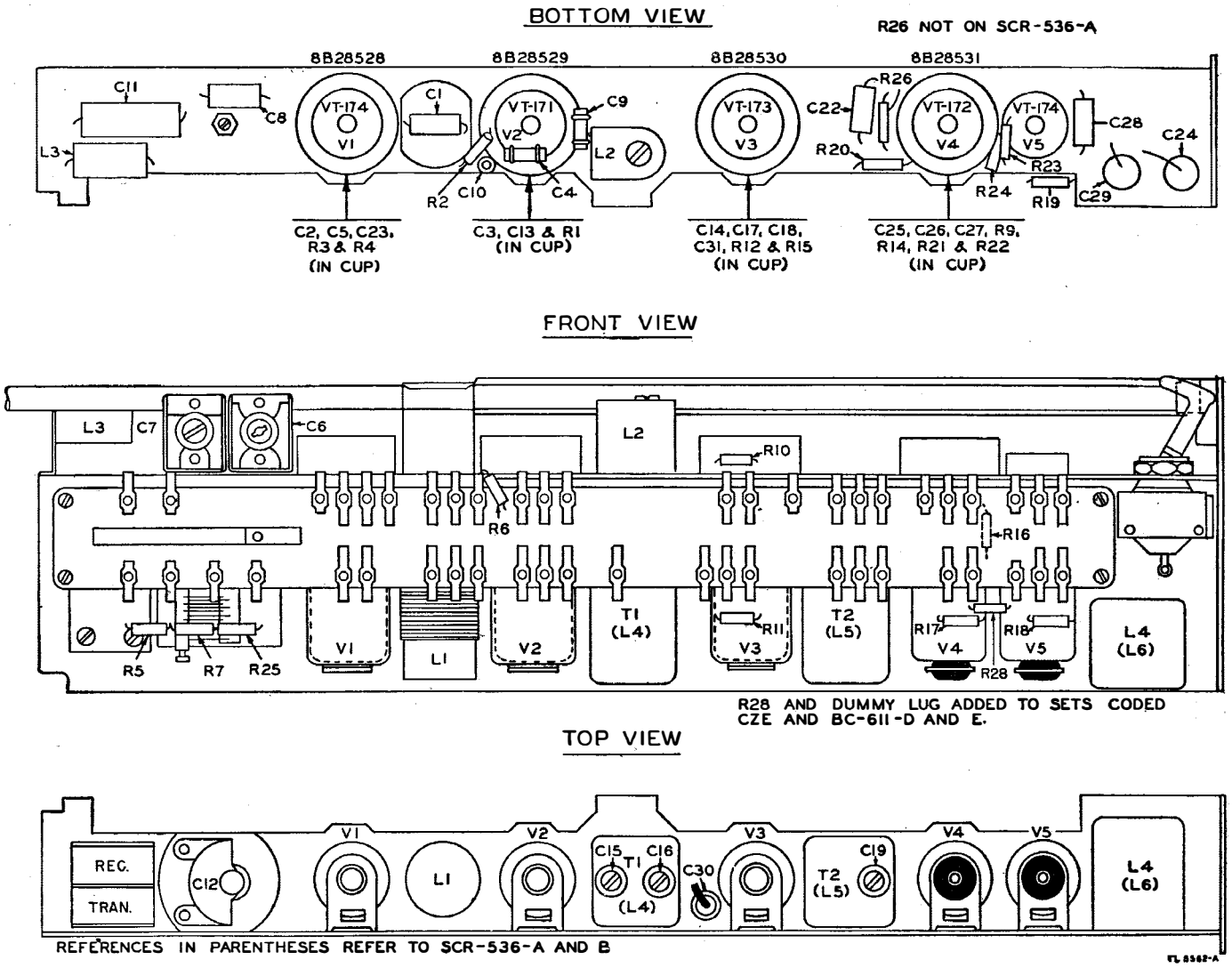

Figure 88. Radio Receiver and Transmitters BC-611-A through -E, location of parts.

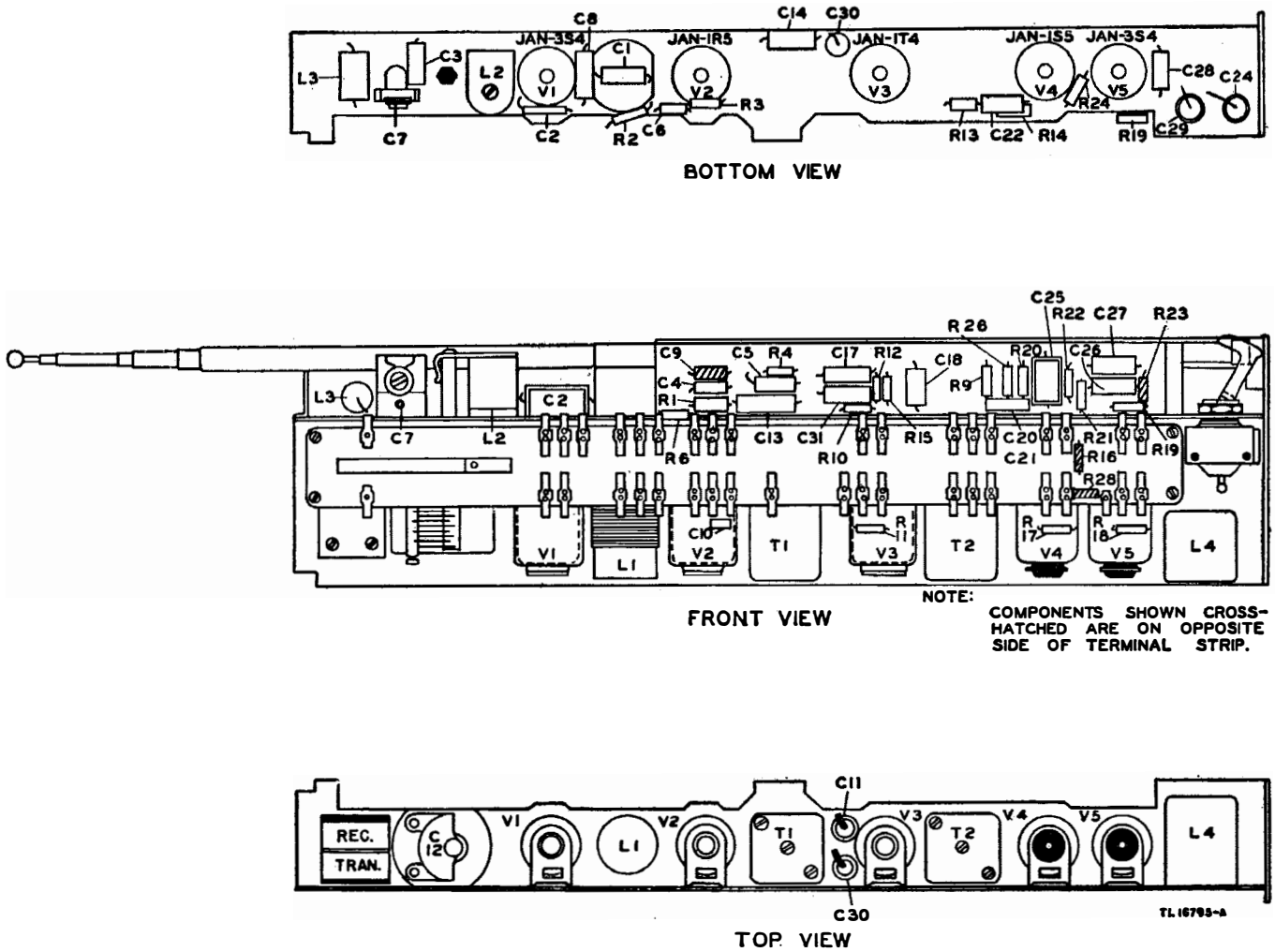

Figure 89. Radio Receiver and Transmitter BC-611-F, location of parts.

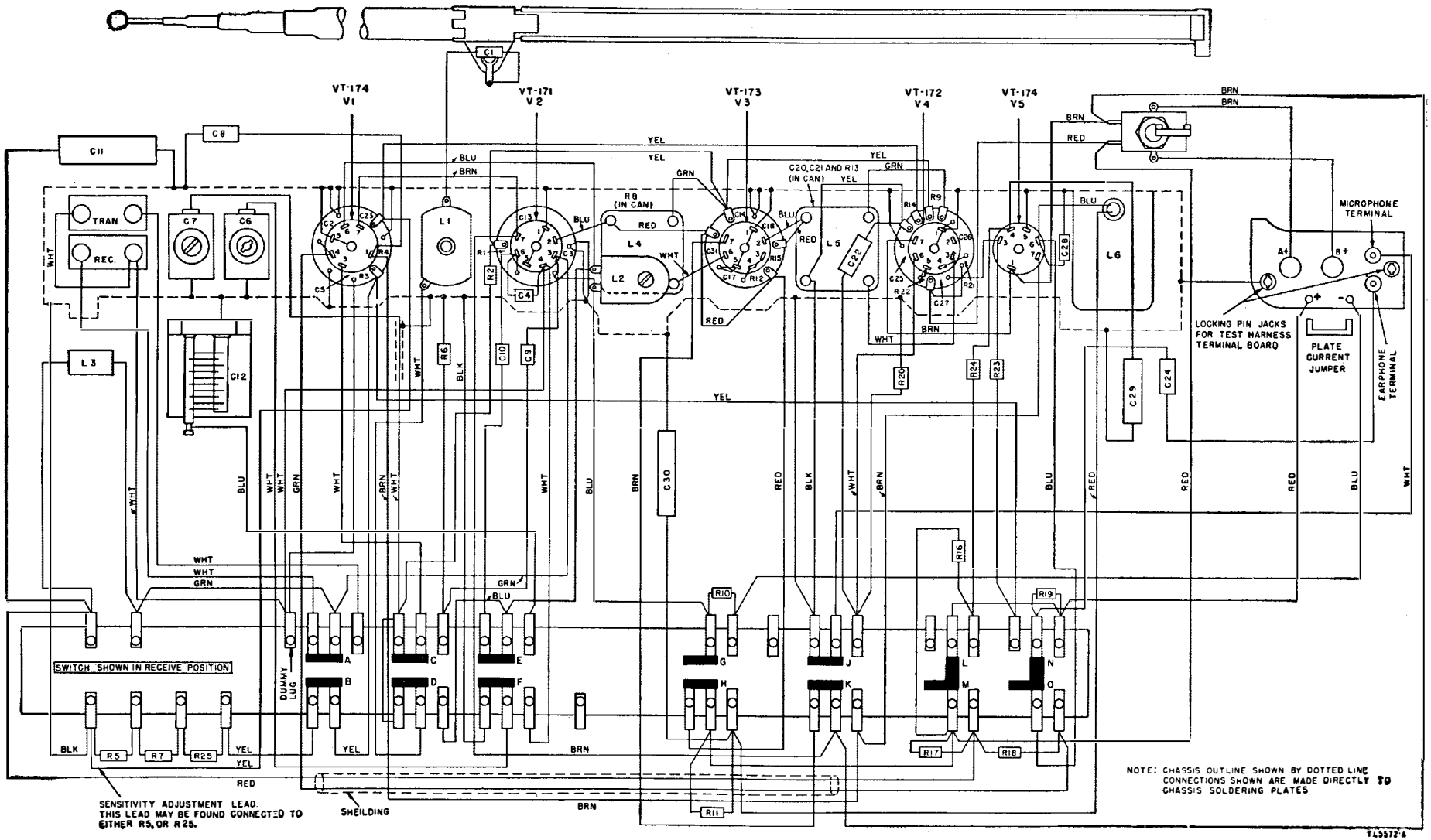

Figure 90. Radio Receiver and Transmitter BC-611-A, wiring diagram.

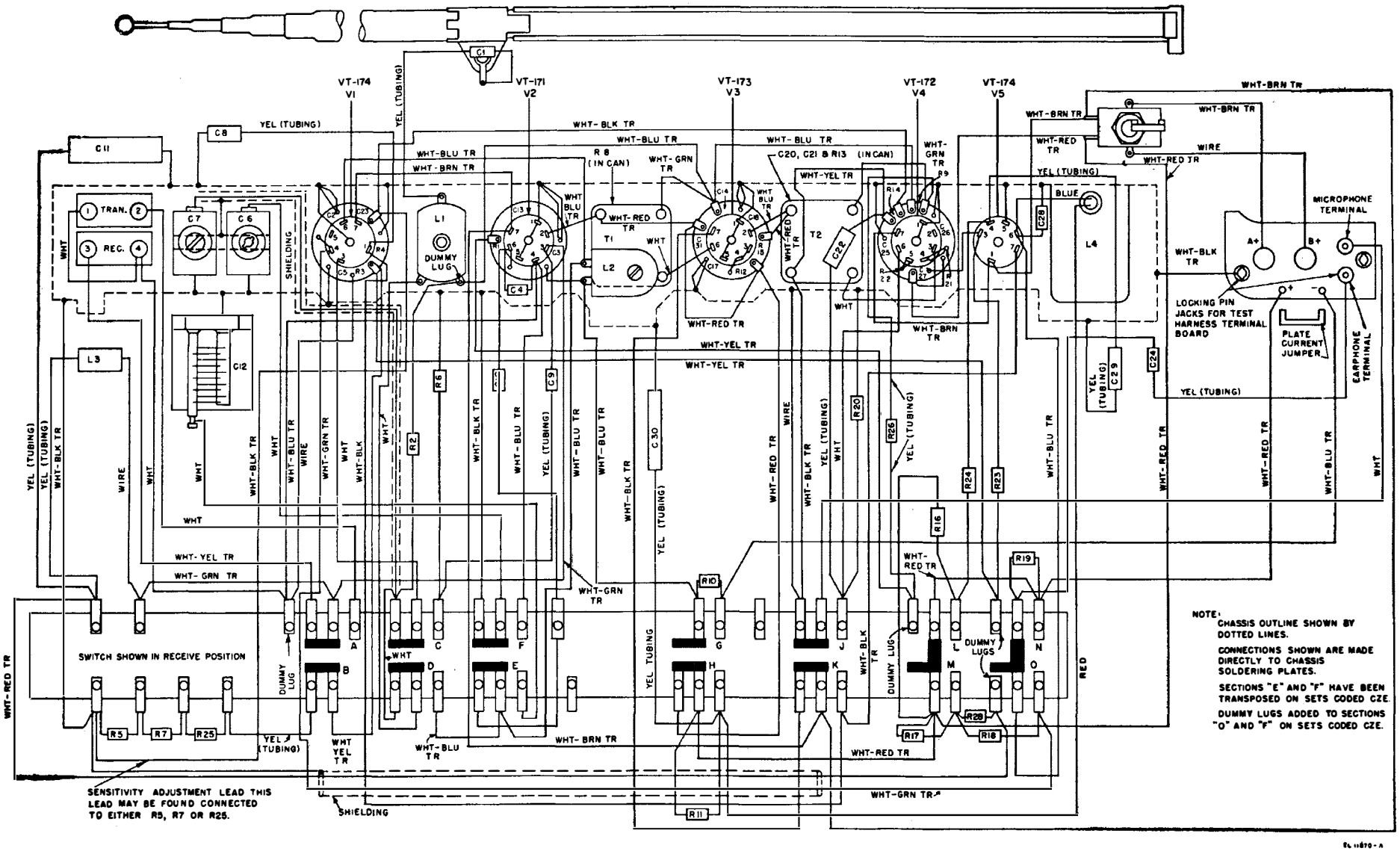

Figure 91. Sets coded CZE, wiring diagram.

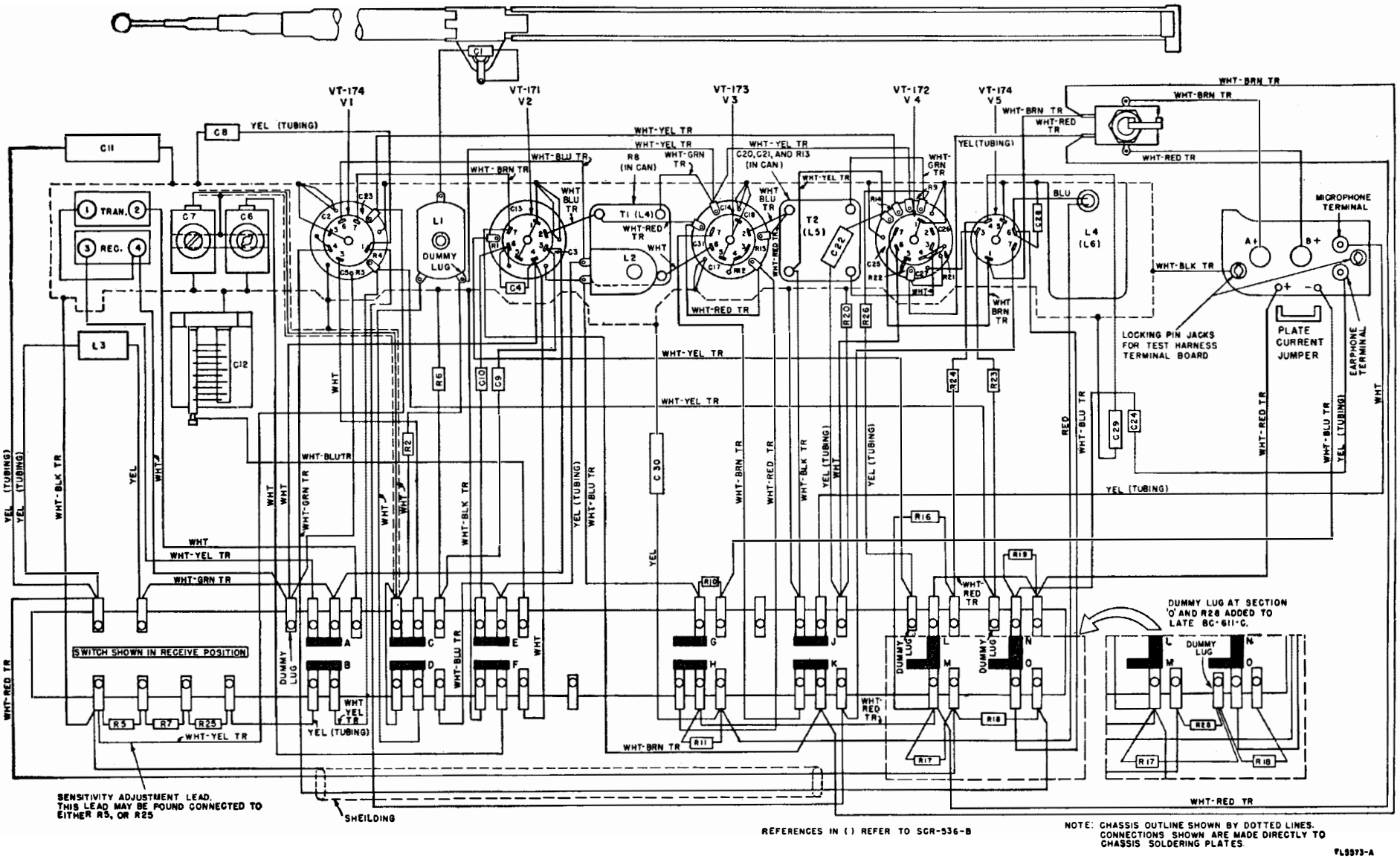

Figure 92. Radio Receiver and Transmitters BC-611-B through -E, wiring diagram.

SC
3585
A

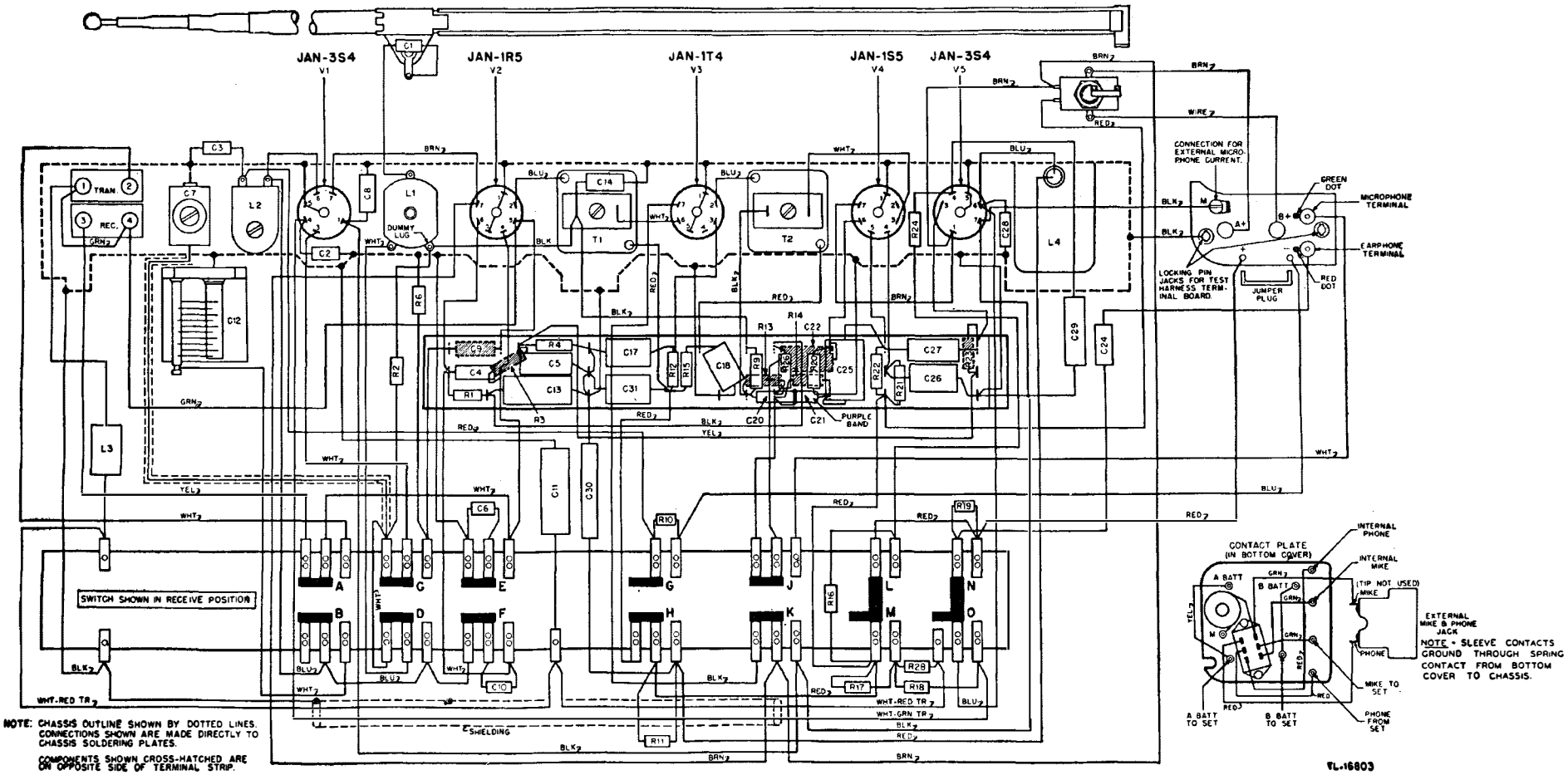

Figure 93. Radio Receiver and Transmitter BC–611–F, wiring diagram.